LORING
CONSULTING ENGINEERS

Trinity AME Zion Church
972 W. Pennsylvania Ave., Southern Pines, NC 28387

Existing MEP Systems Conditions Assessment Report/ Recommendations

Prepared for: Strada Architecture

Prepared by: Loring Consulting Engineers, Inc.
1007 Slater Road, Suite 120
Durham, NC 27703

27 February 2026
Loring No. 14871-000

TABLE OF CONTENTS

INTRODUCTION	1
EXECUTIVE SUMMARY	2
MECHANICAL SYSTEMS	3
PLUMBING & FIRE PROTECTION SYSTEMS	4
ELECTRICAL SYSTEMS	5
MEP DESIGN	6
APPENDIX A – HVAC CUT SHEETS	12

INTRODUCTION

Loring Consulting Engineers, Inc (LORING) has been retained by Strada to assess the existing Mechanical, Electrical, and Plumbing (MEP) Systems serving the Trinity AME Zion Church. The church is located at 972 W. Pennsylvania Avenue in Southern Pines, NC. The building was constructed in 1923 and has been utilized to provide an inviting and safe place, offering a place for worship and community to meet and collaborate. This report is limited to documenting the existing MEP conditions and providing recommendations to allow the congregation to occupy the sanctuary and utilize the restrooms in the basement. This is referred to as Phase 1 throughout the report.

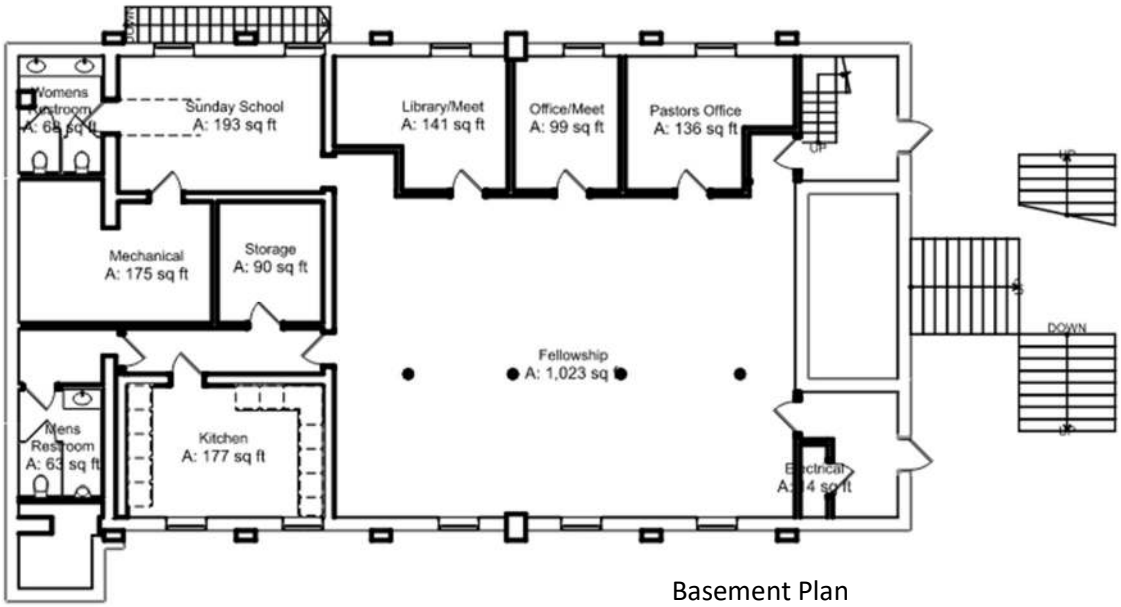

Basement Plan

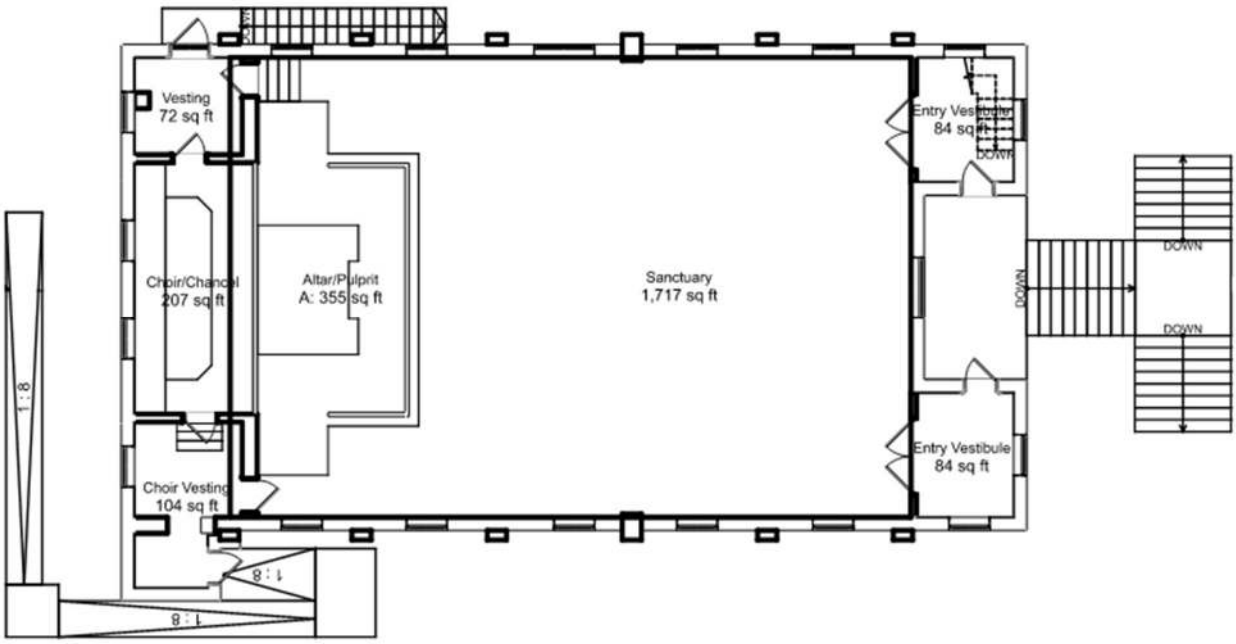

Sanctuary Plan

EXECUTIVE SUMMARY

Based on our observations, the existing MEP systems are not functioning well and should be replaced. The following items will need to be modified or added at a minimum to allow the congregation to reoccupy the sanctuary and utilize the restrooms in the basement (more detail is provided within the body of this report):

1. The existing HVAC system will need to be replaced with a heat pump system type totaling approximately 15 tons.

2. The existing electrical branch circuit distribution will need to be modified to refeed lighting and other miscellaneous devices.

3. The existing building plumbing infrastructure can support the existing layout.

We have no zoning/code concerns based on our analysis of the project requirements.

MECHANICAL SYSTEMS

A. Heating/Cooling

The building is served via three (3) DX split A/C units with gas furnace that total approximately 13 tons. Each unit has ducted supply, return, and outside air. We observed a gas company unsafe notice for the gas furnace issued in April 2011 for improper venting of the equipment. There is one (1) exhaust fan that serves the existing restroom. The kitchen is served via no exhaust. The equipment was manufactured in 2006 and is approaching the end of their useful service life. The current duct distribution/layout is not optimal as the units in the sanctuary supply cooling from above the choir loft and the heating is done via the unit the basement ducted to four (4) registers located in the floor of the sanctuary.

Existing Gas Furnace

PLUMBING & FIRE PROTECTION SYSTEMS

A. Domestic Water Services

The building is fed via one (1) 1” domestic cold-water service. The water pressure was approximately 48 psi measured at the faucet. Note the pressure is adequate to support anticipated renovation of the building, but a larger 2” water service would be required to support additional fixtures. Some of the existing water piping was not properly insulated.

B. Domestic Hot Water

There is one (1) tank type 50-gallon electric water heater that serves/produces the domestic hot water for the building. The water heater was manufactured in 2008 and is past its useful service life. However, if the water heater is functioning properly, it will be reused for this initial Phase 1.

C. Sanitary

The building’s sanitary and waste system is currently served by a single stack distributed to each restroom. The waste line exits below grade on the rear of the building.

D. Storm

The storm water/roof drainage system is served via gutters and down spouts.

Existing Water Heater

Existing Bathroom

ELECTRICAL SYSTEMS

A. Electric Services

The building is being served via a 400A, 240V, 1-Phase service. The electrical distribution (panelboards) are within their useful service life. They will be modified based on the proposed space plan. There will be some rewiring of branch circuits based on observations of electrical arcing and the age/type of wiring that has been utilized.

B. Fire Alarm

Currently there is no Fire Alarm system serving the building.

Existing Electrical Panel

MEP DESIGN

General Design Intent

MEP systems will be designed to conform to the 2018 State of North Carolina Building Code, Mechanical Code, Fire Protection Code, and Energy Conservation Code. Systems will also be designed per National Fire Protection Association (NFPA) Codes, State of North Carolina directives, and applicable local codes and regulations of the authorities having jurisdiction. All systems will meet recognized standards for energy efficiency, maintenance, and long-term service life.

HVAC Systems

Design Criteria

1. Outside Design Conditions:

   Location: Pinehurst, NC

   Latitude: 36°

   Winter: DBT 15°F/ WBT 13°F

   Summer: DBT 93°F/WBT 76°F

2. Inside Design Conditions:

   Dry bulb temperature (Summer): 74°F (±2.0°F)

   Dry bulb temperature (Winter): 70°F (±2.0°F)

   Relative humidity (Summer): 50% (±10%)

3. Building Construction:

   Wall Construction: U Value = 0.089 BTU/H°F-SF

   Roof Construction: U Value = 0.34 BTU/H°F-SF

   Window: U Value = 0.4 BTU/H°F-SF, SC = 0.4 (interior blinds) – New Windows

4. Miscellaneous Sensible Gains:

   - Conference room lighting: 0.75 watts/sf
   - Office and support area lighting: 0.75 watts/sf
   - Sanctuary lighting: 1.0 watts/sf
   - Kitchen lighting: 1.2 watts/sf
   - Conference room equipment: 1.0 watts/sf

- Sanctuary Equipment: 1 watts/sf
- Kitchen Equipment: 6 watts/sf

5. Room Criteria:

- Offices: NC 30
- Conference Rooms: NC 30
- Sanctuary Area: NC 30
- Public areas: NC 40
- Kitchen: NC 40

All other occupied spaces not listed above will be in compliance with values listed in ASHRAE HVAC Application handbook.

Ventilation

Ventilation systems will be designed in accordance with the State of North Carolina Mechanical Code.

Cooling/Heating System

General:

- Cooling/Heating for the building spaces will be provided via a heat pump system totaling approximately 15 tons. The condensers (total of 3) will be located outside on the ground, and the evaporators will be located in the basement and sanctuary back of house (above vestibules).
    - Heat pump system to replace existing split A/C units and gas furnace in kind.

Cooling System

Duct Systems

General:

- All ductwork will be sealed, insulated and installed per NCBC, NCECC, and NFPA requirements.

Supply and Return:

- Ductwork distribution will consist of reconnecting to existing ducts currently installed.

Exhaust:

- Exhaust systems will be existing to remain and will not be modified as part of Phase 1.

Piping

Refrigerant and condensate piping:

- Pipes:
  - Type L copper pipe, soldered copper Type 'L" Drawn, ASTM B88 up to 2".
- Fittings:
  - Welded fittings, screwed fittings for 2" and smaller.

HVAC Insulation

Duct will be insulated as follows:

- All insulation R-values will meet the requirements of the 2018 Energy Conservation Code of the State of North Carolina.
- Insulation will meet the requirements of UL for flame spread and smoke developed (less than 25 and 50, respectively).
- All Supply and Return Ductwork:
  - 1-1/2" thick, 1.5# density glass fiber insulation wrap with reinforced foil faced, flame resistant vapor barrier and a minimum thermal resistance of 0.2 BTU/in/ft^2-°F.
- All Outdoor Air Intake Ductwork:
  - 2" thick, 6# density rigid insulation board applied with metal pins and shields and a minimum thermal resistance of 0.125 BTU/in/ft2-°F.

Pipe will be insulated as follows:

- Refrigerant:
  - 1-1/2" thick insulation. Type I, flexible, closed cell elastomeric tubular insulation with an average thermal conductivity of 0.27 BTU/in/ft2-°F.

Building Automation System

General:

- All controls will be standalone type and self-contained.

Electrical Systems

General:

- Electric work will conform to the applicable rules and regulations of the North Carolina Building Code, NFPA 70, National Electrical Code, and applicable local codes and regulations of the authorities having jurisdiction (AHJ).
- Each electrical panel board shall be provided with a panel number marked (at the exterior panel face) that is coordinated with the panel board schedules on the electrical construction drawings.
- Lighting fixtures shall be 2700K color temperature.

Electrical Service

The existing 400A, 240/120V service will be reutilized to serve the building.

Electrical Distribution and Equipment

1. Existing Panelboards will be reused.
2. Wiring Methods:
   a. Feeder and branch circuit wiring will be run in RGS (Rigid Galvanized Steel) or EMT (Electric Metallic Tubing) as follows:

      Power Feeders - RGS for all exposed and for concealed 2” or larger.
      - EMT for concealed 1-1/2” or smaller.

      Branch Circuits - RGS for all 2” or larger and in mechanical and electrical rooms.

      Telecom/AV - EMT 4” or smaller

      Minimum conduit size shall be ¾”.

      EMT fittings will be insulated throat, steel with compressed fittings 1-1/2” or smaller or set steel screws 2” or larger.

      Conduits routed underground or under slab will be PVC, with RGS turn-up or sleeves as required.

   b. Minimum conduit size will be ¾”. Conduit fill will comply with NEC Art. 310.
   c. Lighting and receptacle branch circuit wiring will be installed concealed in suspended ceilings and walls in finished areas and exposed in mechanical spaces and other areas without suspended ceilings.
   d. Wiring will be copper with type “THHN” or type “THWN” insulation rated at 600 volts. Wire sizes #12AWG and smaller will be solid, wire sizes #10AWG and larger will be stranded.
   e. The option of using EMT in lieu of RGS for feeders and metal clad “MC” cable in lieu of EMT for branch circuiting will be identified in selected areas to be priced as an alternate for cost comparison.
3. Utilization Voltages and Branch Circuiting Criteria:

Lighting:	On a 1 pole, 20 ampere, 120 volt branch circuit, average 1600 watts
Convenience Receptacles:	On a 1 pole, 20 ampere, 120 volt branch circuit, typically receptacles, maximum 8 receptacles
Special Purpose Receptacles:	On a 120 or 240 volt appliance branch circuit, ampere rating as required
Motors 3 / 4 HP and larger:	On a single-phase 240 volt circuit, ampere rating as required
Motors less than 3 / 4 HP:	On a 1 pole, 20 ampere 120 volt branch circuit

Separate neutral conductors will be provided for each phase conductor of 120 volt circuits.

4. Grounding:
   a. Power system grounding will meet or exceed requirements of Article 250 of the NEC.
   b. Insulated equipment ground conductors will be routed with all feeders and branch circuits.
   c. Wall mounted copper ground bus bars will be provided in the electrical service rooms, telecom closets and in dedicated spaces for grounding needs.
   d. All panelboards and equipment will be provided with ground buses or lugs connected to equipment enclosures.

5. Wiring Devices:
   a. General wiring devices will be specification grade. Standard switches will be 120 volt toggle switches; standard duplex receptacles will be NEMA 5-20R. Device plates will be white screwless type.

Emergency Power System

1. Our design will utilize emergency battery inverters/integral battery within the fixture to serve emergency designated lighting fixtures.

Plumbing Systems

Design Criteria

General:

- No hub cast iron for sanitary sewer for waste.
- Isolation valves shall be provided to accommodate maintenance at each module where routine service shall be required without affecting other areas. Isolation valves shall be accessible and located on the floor being served.
- All valves shall be clearly identified (labeled/tagged) and correspond to the facility valve numbering and identification system. Drains shall be provided at the base of all water risers and include National Pipe Threads (NPT) threads, valve, and cap.

Utilities and Sizes:

- The existing 4” Sanitary line for all regular sanitary waste to be reused and modified for the additional fixtures.
- Storm drainage will continue to be via gutters for the building.

APPENDIX A – HVAC CUT SHEETS

Product and Submittal Data

Convertible Air Handlers
2 to 5 Tons

5TEM6B02AV21SA
5TEM6B03AV21SA
5TEM6D04AV31SA
5TEM6D05AV41SA
5TEM6D06AV41SA
5TEM6D07AV51SA

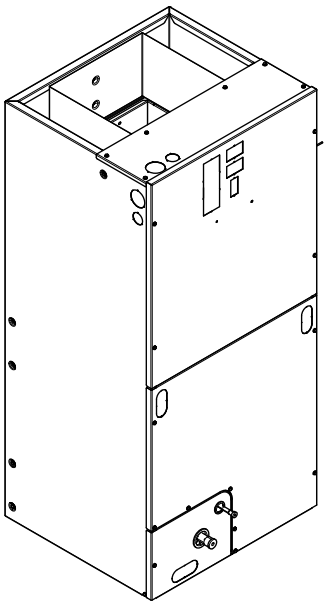

Note: *Graphics in this document are for representation only. Actual model may differ in appearance.*

October 2025

AHR-PSD009B-EN

Introduction

The 5TEM6 series air handler is designed for installation in a closet, utility room, alcove, basement, crawlspace or attic. These versatile units are applicable to air conditioning and heat pump applications. Several models are available to meet the specific requirements of the outdoor equipment. Field installed electric resistance heaters are available.

Copyright

This document and the information in it are the property of Trane, and may not be used or reproduced in whole or in part without written permission. Trane reserves the right to revise this publication at any time, and to make changes to its content without obligation to notify any person of such revision or change.

Trademarks

All trademarks referenced in this document are the trademarks of their respective owners.

Revision History

Updated note (a) on all product specification tables.

Table of Contents

Features and Benefits 4
- Optional Equipment 4

Product Specifications 5

Heater Pressure Drop Table 7

Performance and Electrical Data 8
- Airflow Performance data 8
- Electrical Data 10

Minimum Airflow CFM 13

Wiring Diagram 15

Field Wiring Diagrams 16
- External Switches and Accessories 17

Unit Convertibility 19

Dimensional Data 20

Features and Benefits

- Metal cabinet with captured foil face insulation
- 2% or less air leakage
- R-4.2 Insulating Value
- Multi-Position UP/Down Flow, Horizontal Left /Right
- ALL Aluminum Coil
- Electric Heaters with polarized plug connections (sold as accessory)
- R-454B Thermal Expansion Valve
- Variable Speed ECM Motor
- Low Voltage Pigtail Connections
- Draw Through Design
- Horizontal Drain Pan
- Single Color
- Fused 24v Power
- **5 Year Base Limited Warranty**
- **10 Year Registered Limited Warranty**
- **Optional extended warranty available**

Optional Equipment

Table 1. Optional equipment

Accessory Number	Description	Fits Cabinet Size (in.)
BAYHTR1504BRK	Electric Heater, 4KW, Breaker, 24v Control, 1 Ph	18.5 and 23.5
BAYHTR1504LUG	Electric Heater, 4KW, Lug, 24v Control, 1 Ph	18.5 and 23.5
BAYHTR1505BRK	Electric Heater, 5KW, Breaker, 24v Control, 1 Ph	18.5 and 23.5
BAYHTR1505LUG	Electric Heater, 5KW, Lug, 24v Control, 1 Ph	18.5 and 23.5
BAYHTR1508BRK	Electric Heater, 8KW, Breaker, 24v Control, 1 Ph	18.5 and 23.5
BAYHTR1508LUG	Electric Heater, 8KW, Lug, 24v Control, 1 Ph	18.5 and 23.5
BAYHTR1510BRK	Electric Heater, 10KW, Breaker, 24v Control, 1 Ph	18.5 and 23.5
BAYHTR1510LUG	Electric Heater, 10KW, Lug, 24v Control, 1 Ph	18.5 and 23.5
BAYHTR3510LUG	Electric Heater, 10KW, Lug, 24v Control, 3 Ph	18.5 and 23.5
BAYHTR1517BRK	Electric Heater, 15KW, Breaker, 24v Control, 1 Ph	18.5 and 23.5
BAYHTR3517LUG	Electric Heater, 15KW, Lug, 24v Control, 3 Ph	18.5 and 23.5
BAYHTR1523BRK	Electric Heater, 20KW, Breaker, 24v Control, 1 Ph	23.5
BAYHTR1525BRK	Electric Heater, 25KW, Breaker, 24v Control, 1 Ph	23.5 (D06, D07 only)
BAYTEMSPFG1	Supply Duct Flange Kit	18.5 and 23.5
BAYSPEKT201A	Single Point Power Entry Kit	18.5 and 23.5
TAYBASE185	Air Handler Downflow Sub-Bases 18.5 in	18.5
TAYBASE235 (TAYBASE100)	Air Handler Downflow Sub-Bases 23.5 in.	23.5
BAYTEMDFKT1A	Downflow Condensate Management Kit 23.5 in.	23.5
TEMBRKSEALKT01A	TEM Breaker Seal Kit	18.5 and 23.5
BAYSF1185AAA	Slim Fit Filter Box Kit 18.5 in.	18.5
BAYSF1235AAA	Slim Fit Filter Box Kit 23.5 in.	23.5
FLRSF1185	1 in. Slim Fit Replacement Filter, 17.75 in. x19.75 in., Qty 12 18.5 in.	18.5
FLRSF1235	1 in. Slim Fit Replacement Filter, 22.75 in. x19.75 in., Qty 12 23.5 in	23.5
BAYAH120VKT	120v Conversion Kit	18.5 and 23.5

Product Specifications

Table 2. Models – 5TEM6B02AV21SA, 5TEM6B03AV21SA, and 5TEM6D04AV31SA

Model	5TEM6B02AV21SA	5TEM6B03AV21SA	5TEM6D04AV31SA
Family	5TEM6	5TEM6	5TEM6
Brand	Trane, American Standard	Trane, American Standard	Trane, American Standard
Family Description	R-454B Convertible Variable Speed Air Handler	R-454B Convertible Variable Speed Air Handler	R-454B Convertible Variable Speed Air Handler
Application Configuration	4-Way	4-Way	4-Way
Rated Capacity Range (BTUH)	18K - 24K	18K - 30K	24K - 42K
System Control Type	24v	24v	24v
Power Conn. - V/Ph/Hz	208-230/1/60	208-230/1/60	208-230/1/60
Max Breaker Size, Without Electric Heater (Amps)	15	15	15
Max Breaker Size, With Electric Heater (Amps)[a]	60	60	60
Coil Type	All-Aluminum Plate Fin	All-Aluminum Plate Fin	All-Aluminum Plate Fin
Refrigerant Type	R-454B	R-454B	R-454B
Refrigerant Control	TXV	TXV	TXV
Refrigerant Line Connection - Gas (in.)	3/4	3/4	7/8
Refrigerant Line Connection - Liquid (in.)	3/8	3/8	3/8
Blower Type	Direct Drive Centrifugal	Direct Drive Centrifugal	Direct Drive Centrifugal
Configuration	Draw Through	Draw Through	Draw Through
Dimensions (Diameter x Width (in.))	11 x 8	11 x 8	11 x 8
Motor Type	Variable Speed	Variable Speed	Variable Speed
Nominal CFM[b]	800	1000	1200
Speed (RPM)	1050	1050	1050
Volts/Ph/Hz	208-230/1/60	208-230/1/60	208-230/1/60
Full Load Amps	2.8	4.3	4.3
Filter Rack (Yes, No)	No	No	No
Dimensions (Length x Width (in.))	—	—	-
Duct Connections	L x W	L x W	L x W
Supply (in.)	12.15 x 16.50	12.15 x 16.50	12.15 x 21.50
Return (in.)	18.75 x 16.75	18.75 x 16.75	18.75 x 21.75
Drain Conn. Size (in.)	3/4 NPT	3/4 NPT	3/4 NPT
Dimensions	H x W x D	H x W x D	H x W x D
Uncrated (in.)	46-3/4 x 18-1/2 x 21-1/8	46-3/4 x 18-1/2 x 21-1/8	51-3/8 x 23-1/2 x 21-1/8
Crated (in.)	48-1/4 x 22-1/2 x 25-1/2	48-1/4 x 22-1/2 x 25-1/2	52-3/4 x 27-1/2 x 25-1/2
Weight			
Shipping/Net (lbs.)	126/117	126/117	155/144

[a] Maximum overcurrent protection is dependent on which electric heater is installed. See Electrical Data, p. 10.
[b] For CFM versus external static pressure (in. w.c.), refer to Installation, Operation, and Maintenance manual.

Table 3. Models – 5TEM6D05AV41SA, 5TEM6D06AV41SA, and 5TEM6D07AV51SA

Model	5TEM6D05AV41SA	5TEM6D06AV41SA	5TEM6D07AV51SA
Family	5TEM6	5TEM6	5TEM6
Brand	Trane, American Standard	Trane, American Standard	Trane, American Standard
Family Description	R-454B Convertible Variable Speed Air Handler	R-454B Convertible Variable Speed Air Handler	R-454B Convertible Variable Speed Air Handler
Application Configuration	4-Way	4-Way	4-Way
Rated Capacity Range (BTUH)	36K - 48K	36K - 60K	42K - 60K
System Control Type	24v	24v	24v
Power Conn. - V/Ph/Hz	208-230/1/60	208-230/1/60	208-230/1/60
Max Breaker Size, Without Electric Heater (Amps)	15	15	15
Max Breaker Size, With Electric Heater (Amps)[a]	60	60	60
Coil Type	All-Aluminum Plate Fin	All-Aluminum Plate Fin	All-Aluminum Plate Fin
Refrigerant Type	R-454B	R-454B	R-454B
Refrigerant Control	TXV	TXV	TXV
Refrigerant Line Connection - Gas (in.)	7/8	7/8	7/8
Refrigerant Line Connection - Liquid (in.)	3/8	3/8	3/8
Blower Type	Direct Drive Centrifugal	Direct Drive Centrifugal	Direct Drive Centrifugal
Configuration	Draw Through	Draw Through	Draw Through
Dimensions (Diameter x Width (in.))	11 x 8	11 x 8	11 x 8
Motor Type	Variable Speed	Variable Speed	Variable Speed
Nominal CFM[b]	1400	1600	2000
Speed (RPM)	1050	1050	1050
Volts/Ph/Hz	208-230/1/60	208-230/1/60	208-230/1/60
Full Load Amps	4.3	6.8	6.8
Filter Rack (Yes, No)	No	No	No
Dimensions (Length x Width (in.))	—	—	—
Duct Connections	L x W	L x W	L x W
Supply (in.)	12.15 x 21.50	12.15 x 21.50	12.15 x 21.50
Return (in.)	18.75 x 21.75	18.75 x 21.75	18.75 x 21.75
Drain Conn. Size (in.)	3/4 NPT	3/4 NPT	3/4 NPT
Dimensions	H x W x D	H x W x D	H x W x D
Uncrated (in.)	51-3/8 x 23-1/2 x 21-1/8	57-3/8 x 23-1/2 x 21-1/8	57-3/8 x 23-1/2 x 21-1/8
Crated (in.)	52-3/4 x 27-1/2 x 25-1/2	58-1/8 x 25-7/8 x 25-1/2	58-1/8 x 25-7/8 x 25-1/2
Weight			
Shipping/Net (lbs.)	155/144	185/174	185/174

[a] Maximum overcurrent protection is dependent on which electric heater is installed. See Electrical Data, p. 10.
[b] For CFM versus external static pressure (in. w.c.), refer to Installation, Operation, and Maintenance manual.

Heater Pressure Drop Table

Table 4. Heater pressure drop

Airflow CFM	Number of Racks					Heater Racks	
	1	2	3	4		Heater Model	No. of Racks
	Air Pressure Drop — Inches W.G.						
1800	0.02	0.04	0.06	0.14		BAYHTR1504	1
1700	0.02	0.04	0.06	0.14		BAYHTR1505	1
1600	0.02	0.04	0.06	0.13		BAYHTR1508	2
1500	0.02	0.04	0.06	0.12		BAYHTR1510	2
1400	0.02	0.04	0.06	0.12		BAYHTR1517	3
1300	0.02	0.04	0.05	0.11		BAYHTR3510	3
1200	0.01	0.04	0.05	0.10		BAYHTR3517	3
1100	0.01	0.03	0.05	0.09		BAYHTR1523	4
1000	0.01	0.03	0.04	0.09		BAYHTR1525	4
900	0.01	0.03	0.04	0.08		—	—
800	0.01	0.03	—	—		—	—
700	0.01	0.02	—	—		—	—
600	0.01	0.02	—	—		—	—

Performance and Electrical Data

Airflow Performance data

Table 5. Cooling airflow performance – model 5TEM6B02AV21SA

5TEM6B02AV21SA Cooling Airflow Performance, Wet Coil, No Filter, No Heater												
Outdoor Unit Size (Tons)	Speed Setting	Airflow Setting	DIP Switch Setting				Airflow Power	External Static Pressure				
			SW1	SW2	SW3	SW4		0.1	0.3	0.5	0.7	0.9
1.5	Low	353 CFM/ ton	ON	ON	OFF	ON	CFM Watts	524 49	517 83	482 111	418 133	326 148
	Normal	401 CFM/ ton	ON	ON	OFF	OFF	CFM Watts	608 60	604 99	580 134	535 167	471 197
	High	451 CFM/ ton	ON	ON	ON	OFF	CFM Watts	683 76	683 119	664 160	626 198	571 233
2	Low	343 CFM/ ton	OFF	ON	OFF	ON	CFM Watts	693 78	693 122	674 164	638 202	583 237
	Normal	390 CFM/ ton	OFF	ON	OFF	OFF	CFM Watts	787 98	791 149	780 197	753 241	712 284
	High	439 CFM/ ton	OFF	ON	ON	OFF	CFM Watts	883 126	889 181	877 233	847 285	801 333
2.5	Low	300 CFM/ ton	ON	OFF	OFF	ON	CFM Watts	757 91	760 140	746 186	716 229	671 269
	Normal[(a)]	340 CFM/ ton	ON	OFF	OFF	OFF	CFM Watts	863 119	867 173	854 224	826 273	781 319
	High	383 CFM/ ton	ON	OFF	ON	OFF	CFM Watts	950 151	963 213	945 265	896 310	818 345

[(a)] Factory Default Setting

Table 6. Heating airflow performance – model 5TEM6B02AV21SA

5TEM6B02AV21SA Heating Airflow Performance, No Filter, No Heater												
Outdoor Unit Size (Tons)	Speed Setting	Airflow Setting	DIP Switch Setting				Airflow Power	External Static Pressure				
			SW1	SW2	SW3	SW4		0.1	0.3	0.5	0.7	0.9
1.5	Low	394 CFM/ ton	ON	ON	OFF	ON	CFM Watts	594 53	596 91	568 125	525 160	456 186
	Normal	448 CFM/ ton	ON	ON	OFF	OFF	CFM Watts	677 68	681 110	662 152	627 192	573 226
	High	493 CFM/ ton	ON	ON	ON	OFF	CFM Watts	744 81	749 127	739 175	709 219	665 257
2	Low	393 CFM/ ton	OFF	ON	OFF	ON	CFM Watts	791 91	796 139	792 191	764 238	726 278
	Normal	446 CFM/ ton	OFF	ON	OFF	OFF	CFM Watts	892 120	900 171	894 228	865 283	815 325
	High	491 CFM/ ton	OFF	ON	ON	OFF	CFM Watts	987 147	1013 201	983 260	961 322	913 365
2.5	Low	350 CFM/ ton	ON	OFF	OFF	ON	CFM Watts	878 115	886 166	880 222	851 276	810 321
	Normal[(a)]	398 CFM/ ton	ON	OFF	OFF	OFF	CFM Watts	101 151	989 205	998 264	974 328	926 371
	High	437 CFM/ ton	ON	OFF	ON	OFF	CFM Watts	1108 185	1092 241	1108 300	1072 372	1024 412

[(a)] Factory Default Setting

Table 7. Cooling airflow performance – model 5TEM6B03AV21SA

5TEM6B03AV21SA Cooling Airflow Performance, Wet Coil, No Filter, No Heater												
Outdoor Unit Size (Tons)	Speed Setting	Airflow Setting	DIP Switch Setting				Airflow Power	External Static Pressure				
			SW1	SW2	SW3	SW4		0.1	0.3	0.5	0.7	0.9
1.5	Low	353 CFM/ ton	ON	ON	OFF	ON	CFM Watts	479 39	455 68	440 95	395 121	331 143
	Normal	401 CFM/ ton	ON	ON	OFF	OFF	CFM Watts	577 52	553 86	548 119	509 149	454 176
	High	451 CFM/ ton	ON	ON	ON	OFF	CFM Watts	672 67	647 106	652 144	620 179	571 212
2	Low	343 CFM/ ton	OFF	ON	OFF	ON	CFM Watts	686 69	685 110	667 148	635 184	588 218
	Normal	390 CFM/ ton	OFF	ON	OFF	OFF	CFM Watts	796 92	799 137	788 181	763 223	724 264
	High	439 CFM/ ton	OFF	ON	ON	OFF	CFM Watts	892 116	899 165	892 215	872 263	837 312
2.5	Low	300 CFM/ ton	ON	OFF	OFF	ON	CFM Watts	749 82	751 125	738 166	710 206	668 244
	Normal	340 CFM/ ton	ON	OFF	OFF	OFF	CFM Watts	867 109	874 157	866 205	843 252	805 299
	High	383 CFM/ ton	ON	OFF	ON	OFF	CFM Watts	965 139	976 191	972 244	954 298	922 353
3	Low	310 CFM/ ton	OFF	OFF	OFF	ON	CFM Watts	940 131	950 182	945 234	926 286	892 339
	Normal[(a)]	330 CFM/ ton	OFF	OFF	OFF	OFF	CFM Watts	993 149	956 202	1002 257	985 313	953 370

[(a)] Factory Default Setting

Table 8. Heating airflow performance – model 5TEM6B03AV21SA

5TEM6B03AV21SA Heating Airflow Performance, No Filter, No Heater												
Outdoor Unit Size (Tons)	Speed Setting	Airflow Setting	DIP Switch Setting				Airflow Power	External Static Pressure				
			SW1	SW2	SW3	SW4		0.1	0.3	0.5	0.7	0.9
1.5	Low	394 CFM/ ton	ON	ON	OFF	ON	CFM Watts	571 44	574 82	544 113	502 137	441 171
	Normal	448 CFM/ ton	ON	ON	OFF	OFF	CFM Watts	677 60	682 99	668 138	618 170	572 206
	High	493 CFM/ ton	ON	ON	ON	OFF	CFM Watts	746 75	752 116	739 160	712 200	674 237
2	Low	393 CFM/ ton	OFF	ON	OFF	ON	CFM Watts	799 86	806 128	799 175	773 220	740 259
	Normal	446 CFM/ ton	OFF	ON	OFF	OFF	CFM Watts	902 111	911 157	912 210	891 260	861 308
	High	491 CFM/ ton	OFF	ON	ON	OFF	CFM Watts	995 131	994 181	986 242	984 293	954 352
2.5	Low	350 CFM/ ton	ON	OFF	OFF	ON	CFM Watts	887 106	895 152	895 204	873 254	843 300
	Normal	398 CFM/ ton	ON	OFF	OFF	OFF	CFM Watts	1004 135	1004 186	998 246	996 298	965 359
	High	437 CFM/ ton	ON	OFF	ON	OFF	CFM Watts	1089 160	1079 215	1064 282	1079 332	1040 408
3	Low	325 CFM/ ton	OFF	OFF	OFF	ON	CFM Watts	986 131	987 180	984 239	997 291	947 349
	Normal[(a)]	346 CFM/ ton	OFF	OFF	OFF	OFF	CFM Watts	1042 146	1038 198	1029 262	1034 313	1001 380

[(a)] Factory Default Setting

Table 9. Cooling airflow performance – model 5TEM6D04AV31SA/5TEM6D05AV41SA

5TEM6D04AV31SA/5TEM6D05AV41SA Cooling Airflow Performance, Wet Coil, No Filter, No Heater												
Outdoor Unit Size (Tons)	Speed Setting	Airflow Setting	DIP Switch Setting				Airflow Power	External Static Pressure				
			SW1	SW2	SW3	SW4		0.1	0.3	0.5	0.7	0.9
2.5	Low	300 CFM/ ton	ON	ON	OFF	ON	CFM Watts	717 47	714 97	698 142	669 183	629 219
	Normal	341 CFM/ ton	ON	ON	OFF	OFF	CFM Watts	801 61	815 116	812 167	792 216	756 262
	High	384 CFM/ ton	ON	ON	ON	OFF	CFM Watts	890 76	922 136	933 195	922 252	890 308
3	Low	319 CFM/ ton	OFF	ON	OFF	ON	CFM Watts	887 75	919 135	929 194	918 251	886 306
	Normal	363 CFM/ ton	OFF	ON	OFF	OFF	CFM Watts	1106 135	1149 202	1173 272	1176 342	1160 414
	High	408 CFM/ ton	OFF	ON	ON	OFF	CFM Watts	1218 175	1263 249	1287 323	1291 401	1274 480
3.5	Low	315 CFM/ ton	ON	OFF	OFF	ON	CFM Watts	1117 139	1161 207	1184 227	1188 348	1172 420
	Normal	357 CFM/ ton	ON	OFF	OFF	OFF	CFM Watts	1233 179	1277 255	1300 331	1301 407	1281 484
	High	402 CFM/ ton	ON	OFF	ON	OFF	CFM Watts	1323 209	1365 294	1379 372	1365 443	1326 505
4	Low	308 CFM/ ton	OFF	OFF	OFF	ON	CFM Watts	1223 176	1268 250	1291 326	1294 403	1277 482
	Normal[a]	350 CFM/ ton	OFF	OFF	OFF	OFF	CFM Watts	1317 208	1354 293	1378 371	1370 441	1310 503
	High	394 CFM/ ton	OFF	OFF	ON	OFF	CFM Watts	1473 281	1493 372	1468 435	1400 471	1294 482

[a] Factory Default Setting

Electrical Data

1. *See Product Data or Air Handler nameplate for approved combinations of Air Handlers and Heaters.*
2. *Heater model numbers may have additional suffix digits.*

Table 10. Model — 5TEM6B02AV21SA

5TEM6B02AV21SA Heater Data											
Heater Model No.	No. of Circuits/ Phases	240 Volt					208 Volt				
		Capacity		Heater Amps per Circuit	Minimum Circuit Ampacity	Maximum Overload Protection	Capacity		Heater Amps per Circuit	Minimum Circuit Ampacity	Maximum Overload Protection
		kW	BTUH				kW	BTUH			
No Heater				2.8[a]	4	15			2.8[a]	4	15
BAYHTR1504BRK BAYHTR1504LUG	1/1	3.84	13100	16.0	24	25	2.88	9800	13.8	21	25
BAYHTR1505BRK BAYHTR1505LUG	1/1	4.80	16400	20.0	29	30	3.60	12300	17.3	25	25
BAYHTR1508BRK BAYHTR1508LUG	1/1	7.68	26200	32.0	44	45	5.76	19700	27.7	38	40
BAYHTR1510BRK BAYHTR1510LUG	1/1	9.60	32800	40.0	54	60	7.20	24600	34.6	47	50
BAYHTR1517BRK Circuit 1[b]	2/1	9.60	32800	40.0	54	60	7.20	24600	34.6	47	50
BAYHTR1517BRK Circuit 2		4.80	16400	20.0	25	25	3.60	12300	17.3	22	25
BAYHTR3510LUG	1/3	9.60	32800	23.1	32	35	7.20	24600	20.0	28	30
BAYHTR3517LUG	1/3	14.40	49100	34.6	46	50	10.80	36900	30.0	41	45

Table 10. Model — 5TEM6B02AV21SA (continued)

(a) Motor Amps
(b) MCA and MOP for circuit 1 contains the motor amps

Table 11. Model — 5TEM6B03AV21SA

5TEM6B03AV21SA Heater Data											
Heater Model No.	No. of Circuits/ Phases	240 Volt					208 Volt				
		Capacity		Heater Amps per Circuit	Minimum Circuit Ampacity	Maximum Overload Protection	Capacity		Heater Amps per Circuit	Minimum Circuit Ampacity	Maximum Overload Protection
		kW	BTUH				kW	BTUH			
No Heater				4.3[a]	5	15			4.3[a]	5	15
BAYHTR1504BRK BAYHTR1504LUG	1/1	3.84	13100	16.0	25	25	2.88	9800	13.8	23	25
BAYHTR1505BRK BAYHTR1505LUG	1/1	4.80	16400	20.0	30	30	3.60	12300	17.3	27	30
BAYHTR1508BRK BAYHTR1508LUG	1/1	7.68	26200	32.0	45	45	5.76	19700	27.7	40	40
BAYHTR1510BRK BAYHTR1510LUG	1/1	9.60	32800	40.0	55	60	7.20	24600	34.6	49	50
BAYHTR1517BRK Circuit 1 [b]	2/1	9.60	32800	40.0	55	60	7.20	24600	34.6	49	50
BAYHTR1517BRK Circuit 2		4.80	16400	20.0	25	25	3.60	12300	17.3	22	25
BAYHTR3510LUG	1/3	9.60	32800	23.1	34	35	7.20	24600	20.0	30	30
BAYHTR3517LUG	1/3	14.40	49100	34.6	48	50	10.80	36900	30.0	42	45

(a) Motor Amps
(b) MCA and MOP for circuit 1 contains the motor amps

Table 12. Models — 5TEM6D04AV31SA/5TEM6D05AV41SA

5TEM6D04AV31SA/5TEM6D05AV41SA Heater Data											
Heater Model No.	No. of Circuits/ Phases	240 Volt					208 Volt				
		Capacity		Heater Amps per Circuit	Minimum Circuit Ampacity	Maximum Overload Protection	Capacity		Heater Amps per Circuit	Minimum Circuit Ampacity	Maximum Overload Protection
		kW	BTUH				kW	BTUH			
No Heater				4.3[a]	5	15			4.3[a]	5	15
BAYHTR1504BRK BAYHTR1504LUG	1/1	3.84	13100	16.0	25	25	2.88	9800	13.8	23	25
BAYHTR1505BRK BAYHTR1505LUG	1/1	4.80	16400	20.0	30	30	3.60	12300	17.3	27	30
BAYHTR1508BRK BAYHTR1508LUG	1/1	7.68	26200	32.0	45	45	5.76	19700	27.7	40	40
BAYHTR1510BRK BAYHTR1510LUG	1/1	9.60	32800	40.0	55	60	7.20	24600	34.6	49	50
BAYHTR1517BRK Circuit 1[b]	2/1	9.60	32800	40.0	55	60	7.20	24600	34.6	49	50
BAYHTR1517BRK Circuit 2		4.80	16400	20.0	25	25	3.60	12300	17.3	22	25
BAYHTR1523BRK Circuit 1[b]	2/1	9.60	32800	40.0	55	60	7.20	24600	34.6	49	50
BAYHTR1523BRK Circuit 2		9.60	32800	40.0	50	50	7.20	24600	34.6	43	45
BAYHTR3510LUG	1/3	9.60	32800	23.1	34	35	7.20	24600	20.0	30	30
BAYHTR3517LUG	1/3	14.40	49100	34.6	48	50	10.80	36900	30.0	42	45

(a) Motor Amps
(b) MCA and MOP for circuit 1 contains the motor amps

Table 13. Models — 5TEM6D06AV41SA/5TEM6D07AV51SA

5TEM6D06AV41SA/5TEM6D07AV51SA Heater Data											
Heater Model No.	No. of Circuits/ Phases	240 Volt					208 Volt				
		Capacity		Heater Amps per Circuit	Minimum Circuit Ampacity	Maximum Overload Protection	Capacity		Heater Amps per Circuit	Minimum Circuit Ampacity	Maximum Overload Protection
		kW	BTUH				kW	BTUH			
No Heater				6.8[a]	9	15			6.8[a]	9	15
BAYHTR1504BRK BAYHTR1504LUG	1/1	3.84	13100	16.0	29	30	2.88	9800	13.8	26	30
BAYHTR1505BRK BAYHTR1505LUG	1/1	4.80	16400	20.0	34	35	3.60	12300	17.3	30	30
BAYHTR1508BRK BAYHTR1508LUG	1/1	7.68	26200	32.0	49	50	5.76	19700	27.7	43	45
BAYHTR1510BRK BAYHTR1510LUG	1/1	9.60	32800	40.0	59	60	7.20	24600	34.6	52	60
BAYHTR1517BRK Circuit 1[b]	2/1	9.60	32800	40.0	59	60	7.20	24600	34.6	52	60
BAYHTR1517BRK Circuit 2		4.80	16400	20.0	25	25	3.60	12300	17.3	22	25
BAYHTR1523BRK Circuit 1[b]	2/1	9.60	32800	40.0	59	60	7.20	24600	34.6	52	60
BAYHTR1523BRK Circuit 2		9.60	32800	40.0	50	50	7.20	24600	34.6	43	45
BAYHTR1525BRK Circuit 1[b]	4/1	6.00	20500	25.0	40	40	4.50	15400	21.6	36	40
BAYHTR1525BRK Circuit 2		6.00	20500	25.0	31	35	4.50	15400	21.6	27	30
BAYHTR1525BRK Circuit 3		6.00	20500	25.0	31	35	4.50	15400	21.6	27	30
BAYHTR1525BRK Circuit 4		6.00	20500	25.0	31	35	4.50	15400	21.6	27	30
BAYHTR3510LUG	1/3	9.60	32800	23.1	36	40	7.20	24600	20.0	33	35
BAYHTR3517LUG	1/3	14.40	49100	34.6	51	60	10.80	36900	30.0	45	45

[a] Motor Amps
[b] MCA and MOP for circuit 1 contains the motor amps

Minimum Airflow CFM

Table 14. Models – 5TEM6B02AV21SA and 5TEM6B03AV21SA

Heater	Minimum Heater Airflow CFM	
	With Heat Pump	Without Heat Pump
BAYHTR1504BRK, BAYHTR1504LUG, BAYHTR1505BRK, BAYHTR1505LUG	660	500
BAYHTR1508BRK, BAYHTR1508LUG	780	600
BAYHTR1510BRK, BAYHTR1510LUG	780	600
BAYHTR1517BRK	1050	850
BAYHTR3510LUG	780	600
BAYHTR3517LUG	900	850

Table 15. Models – 5TEM6D04AV31SA and 5TEM6D05AV41SA

Heater	Minimum Heater Airflow CFM	
	With Heat Pump	Without Heat Pump
BAYHTR1504BRK, BAYHTR1504LUG, BAYHTR1505BRK, BAYHTR1505LUG	875	675
BAYHTR1508BRK, BAYHTR1508LUG	950	820
BAYHTR1510BRK, BAYHTR1510LUG	1000	820
BAYHTR1517BRK	1000	820
BAYHTR3510LUG	875	820
BAYHTR3517LUG	1000	950
BAYHTR1523BRK	1300	1140

Table 16. Models – 5TEM6D06AV41SA and 5TEM6D07AV51SA

Heater	Minimum Heater Airflow CFM	
	With Heat Pump	Without Heat Pump
BAYHTR1504BRK, BAYHTR1504LUG, BAYHTR1505BRK, BAYHTR1505LUG	1200	975
BAYHTR1508BRK, BAYHTR1508LUG	1350	975
BAYHTR1510BRK, BAYHTR1510LUG	1350	975
BAYHTR1517BRK	1365	975
BAYHTR3510LUG	1300	975
BAYHTR3517LUG	1365	1120
BAYHTR1523BRK	1365	1300
BAYHTR1525BRK	1810	1505

Notes: *See following tables for heater application:*

- *Pressure Drop for Electrical Heaters*
- *Minimum Heating Airflow Matrix (on unit nameplates)*

Table 17. Airflow performance with auxiliary heat - models 5TEM6B02AV21SA and 5TEM6B03AV21SA

Airflow Settings	DIP Switch Settings		Nominal Airflow
	Switch 7	Switch 8	
Low	ON	ON	601
Med-Lo	OFF	ON	661
Med-Hi	ON	OFF	781
High	OFF	OFF	973

Table 18. Airflow performance with auxiliary heat - models 5TEM6D04AV31SA and 5TEM6D05AV41SA

Airflow Settings	DIP Switch Settings		Nominal Airflow
	Switch 7	Switch 8	
Low	ON	ON	696
Med-Lo	OFF	ON	825
Med-Hi	ON	OFF	1150
High	OFF	OFF	1298

Table 19. Airflow performance with auxiliary heat - models 5TEM6D06AV41SA and 5TEM6D07AV51SA

Airflow Settings	DIP Switch Settings		Nominal Airflow
	Switch 7	Switch 8	
Low	ON	ON	1000
Med-Lo	OFF	ON	1130

Table 19. Airflow performance with auxiliary heat - models 5TEM6D06AV41SA and 5TEM6D07AV51SA (continued)

Airflow Settings	DIP Switch Settings		Nominal Airflow
	Switch 7	Switch 8	
Med-Hi	ON	OFF	1354
High	OFF	OFF	1596

Wiring Diagram

Figure 1. Wiring diagram

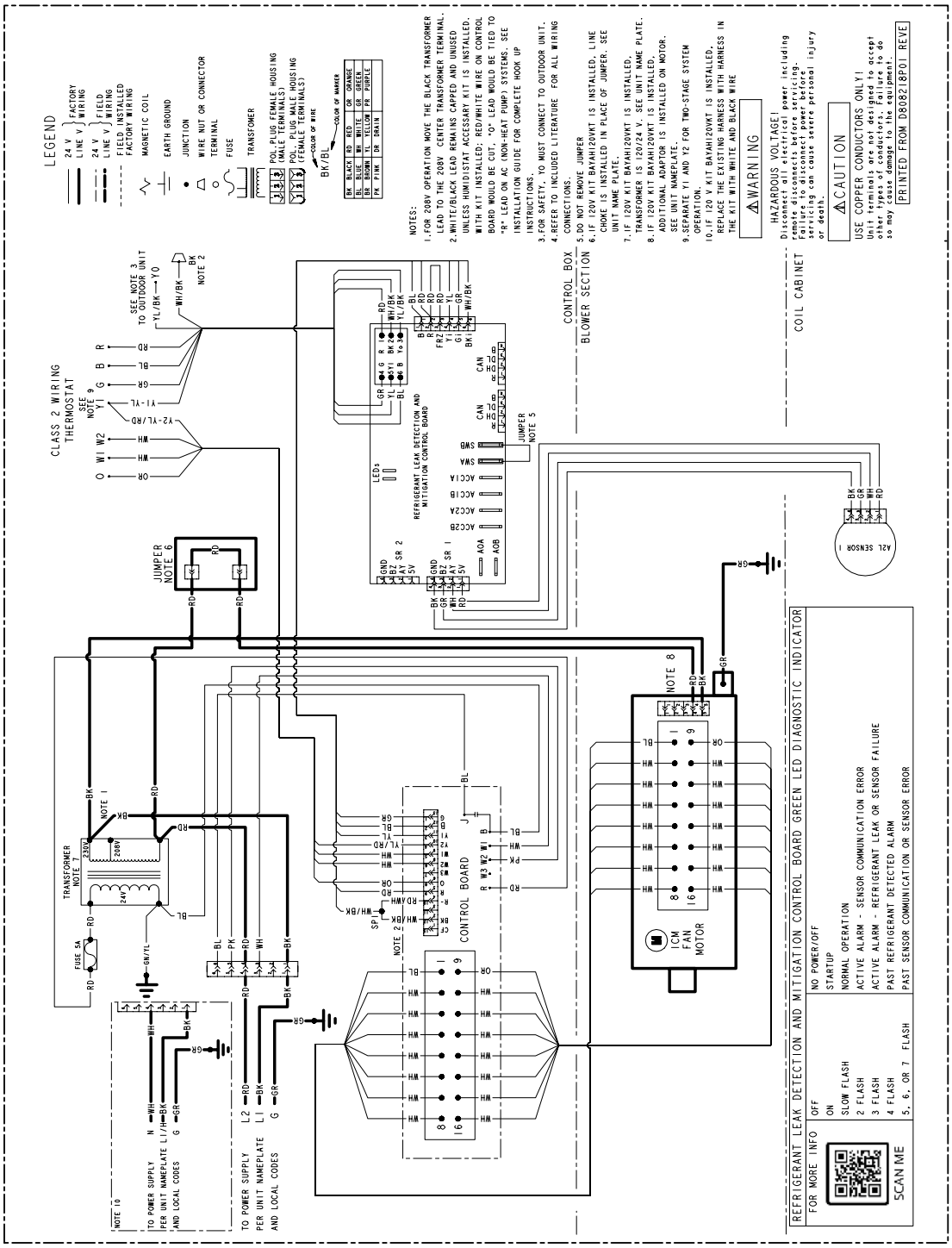

Note: *For refrigerant leak detection and mitigation control board diagnostic flash codes, see the MCB diagnostic code table in Convertible Air Handlers 2 to 5 Tons Installation, Maintenance, and Operation (AHR-SVX006*-EN).*

Field Wiring Diagrams

Figure 2. Field wiring diagrams

Single Stage, Cooling Only

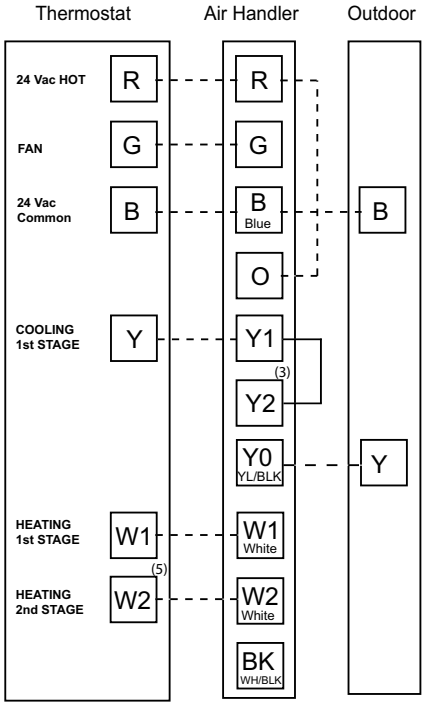

Single Stage, HP

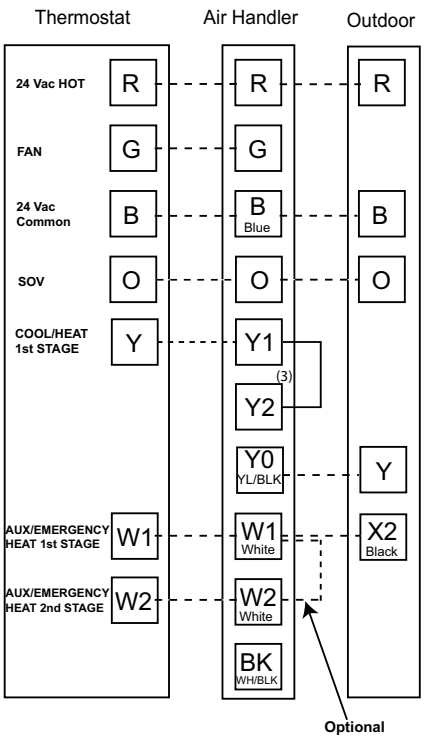

2 Stage Indoor Airflow, Cooling Only

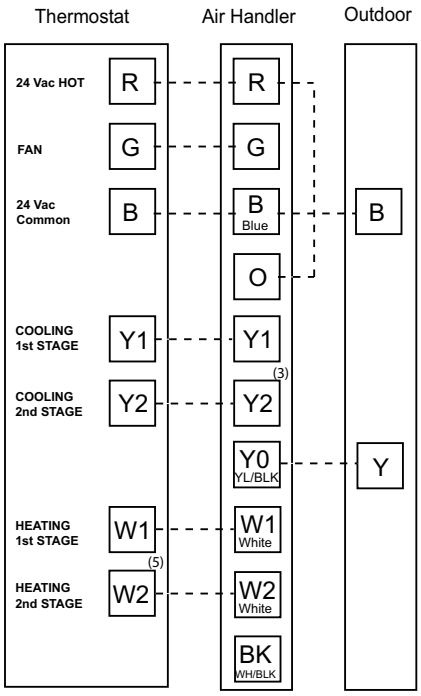

2 Stage Indoor Airflow, HP

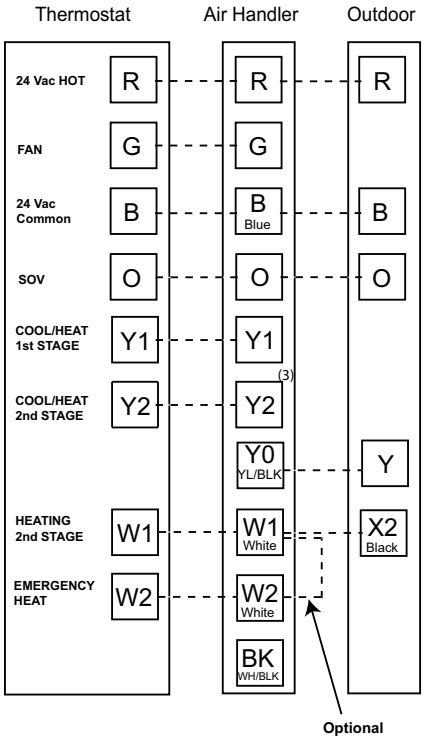

Figure 3. Field wiring diagrams

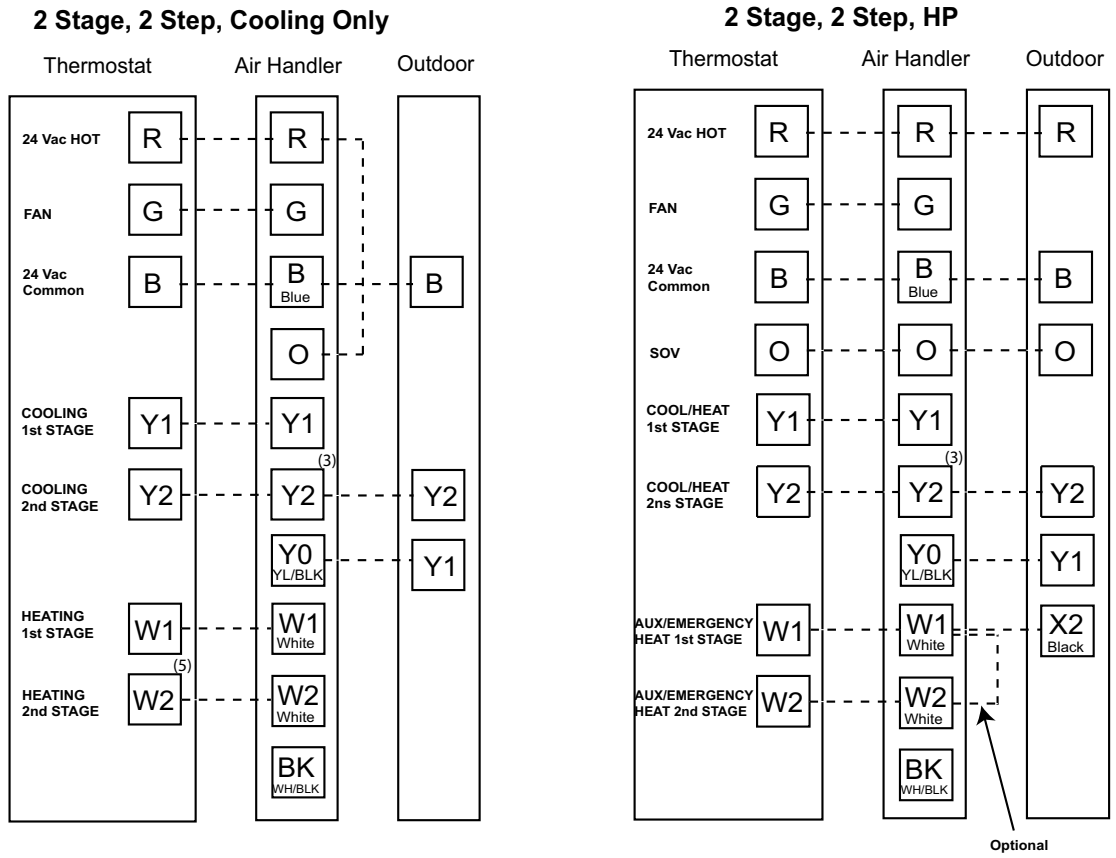

1. Units with pigtails require wirenuts for connections.
2. Cap all unused wires.
3. When BK is used with PWM-enabled Comfort Control, do not connect Y2 at the air handler.
4. When BK is used, cut the jumper between R and BK on the control board. See wiring schematic for details.
5. In AC systems for multiple stages of electric heat, jumper W1 and W2 together if comfort control has only one stage of heat.

External Switches and Accessories

The following optional connections are available on the mitigation control board (see connection diagrams Figure 4, p. 18):

- ACC1 and ACC2 accessory connections. Use when connecting an accessory to the air handler that could be considered a source of ignition (ex. electronic air cleaner).
- Aoa/Aob audible alarm connections. Use when configuring an audible alarm on the refrigerant detection system of the air handler.

ACC1, ACC2, and Aoa/Aob are dry contacts and need source voltage provided from either the accessory or the unit's control wiring.

Connect using field-supplied 3/16–in. (Aoa/Aob) or 1/4–in. (ACC1, ACC2) female spade connections.

Figure 4. Accessories diagram

SCAN ME

Scan QR code to view instructional videos on field wiring for CleanEffects or AccuClean electronic air cleaners.

Electronic Air Cleaner, typical

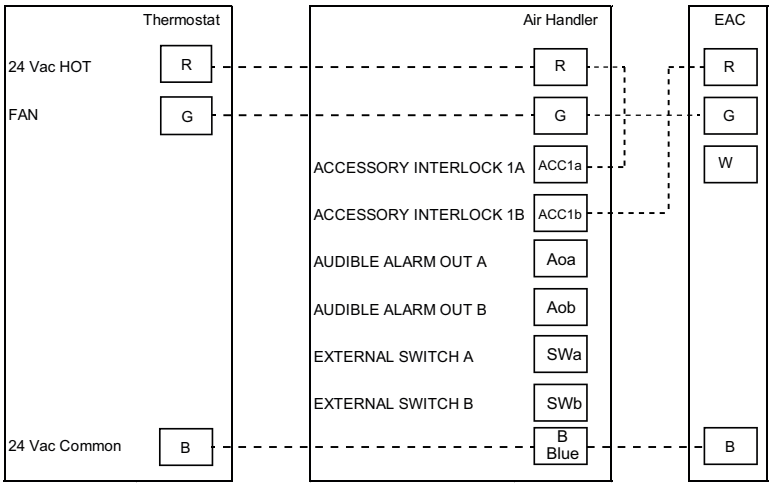

24Vac Audible Alarm, typical

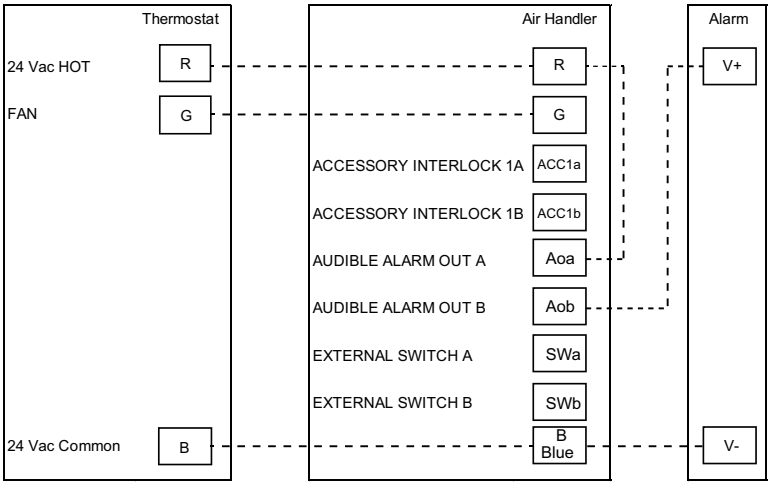

Unit Convertibility

Figure 5. Multi-position air handler
*** = No internal modifications required.**

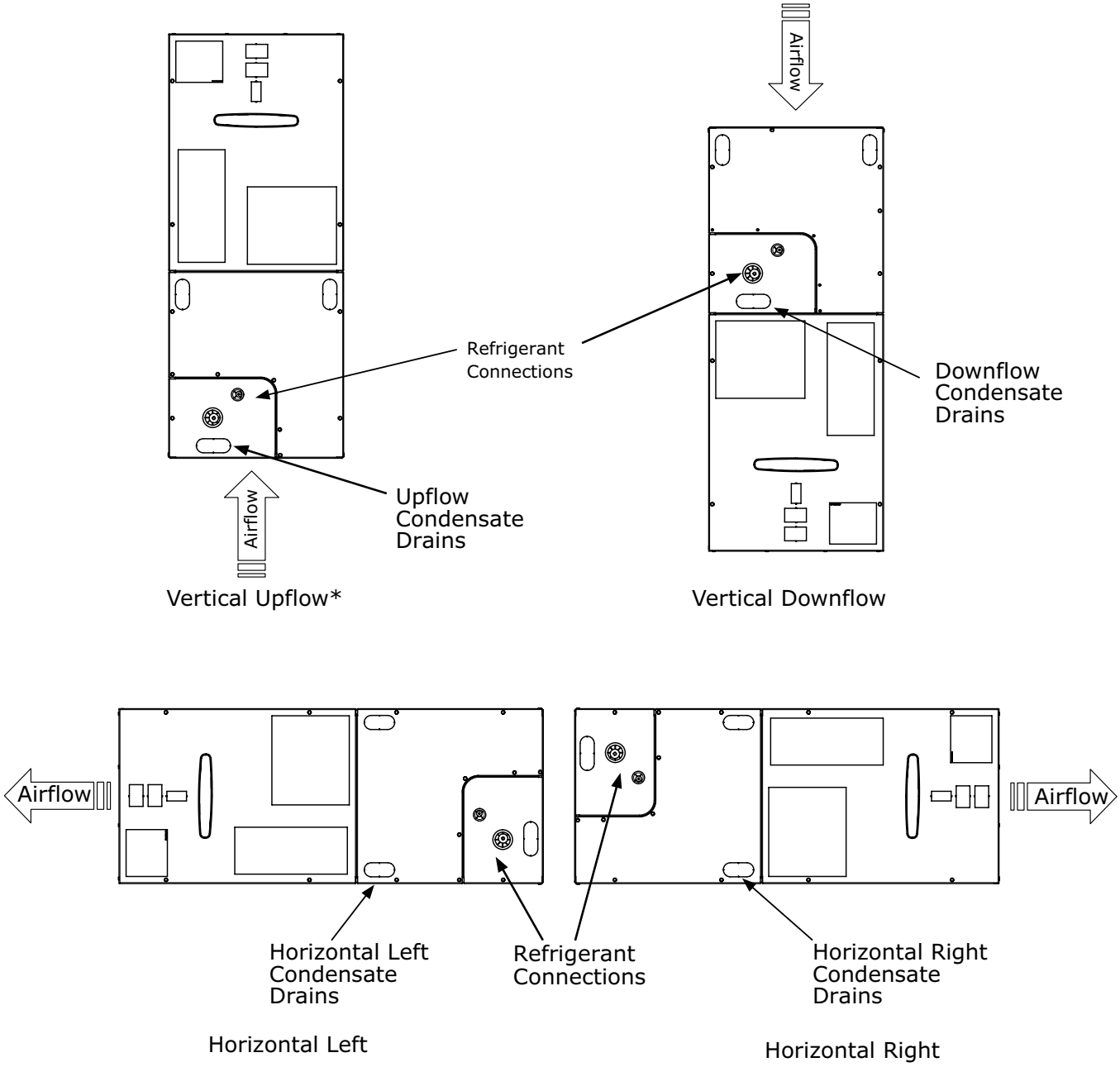

Dimensional Data

Figure 6. Dimensional data

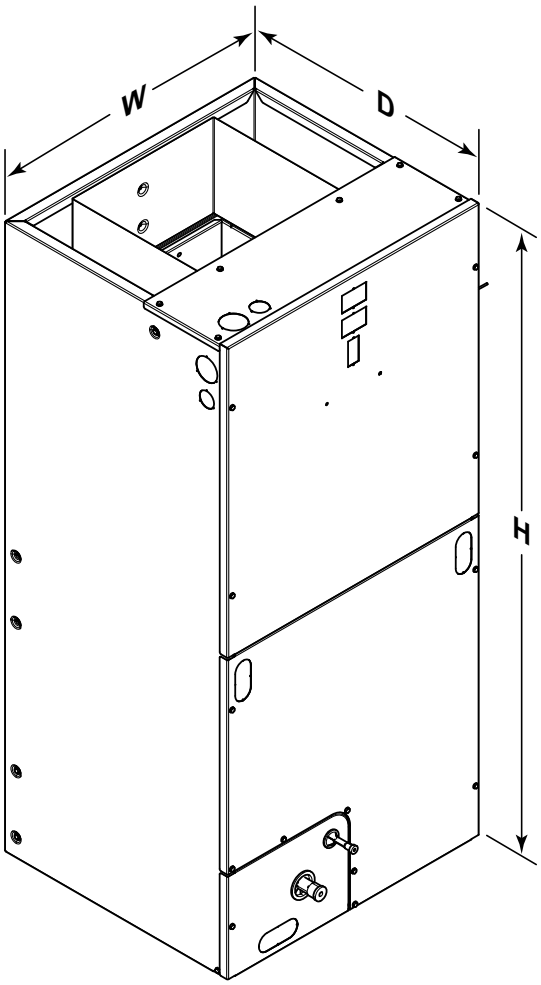

Table 20. Dimensions (inches)

Model No.	H	W	D
5TEM6B02AV21SA	46.77	18.50	21.13
5TEM6B03AV21SA	46.77	18.50	21.13
5TEM6D04AV31SA	51.27	23.50	21.13
5TEM6D05AV41SA	51.27	23.50	21.13
5TEM6D06AV41SA	57.40	23.50	21.13
5TEM6D07AV51SA	57.40	23.50	21.13

Figure 7. Dimensions

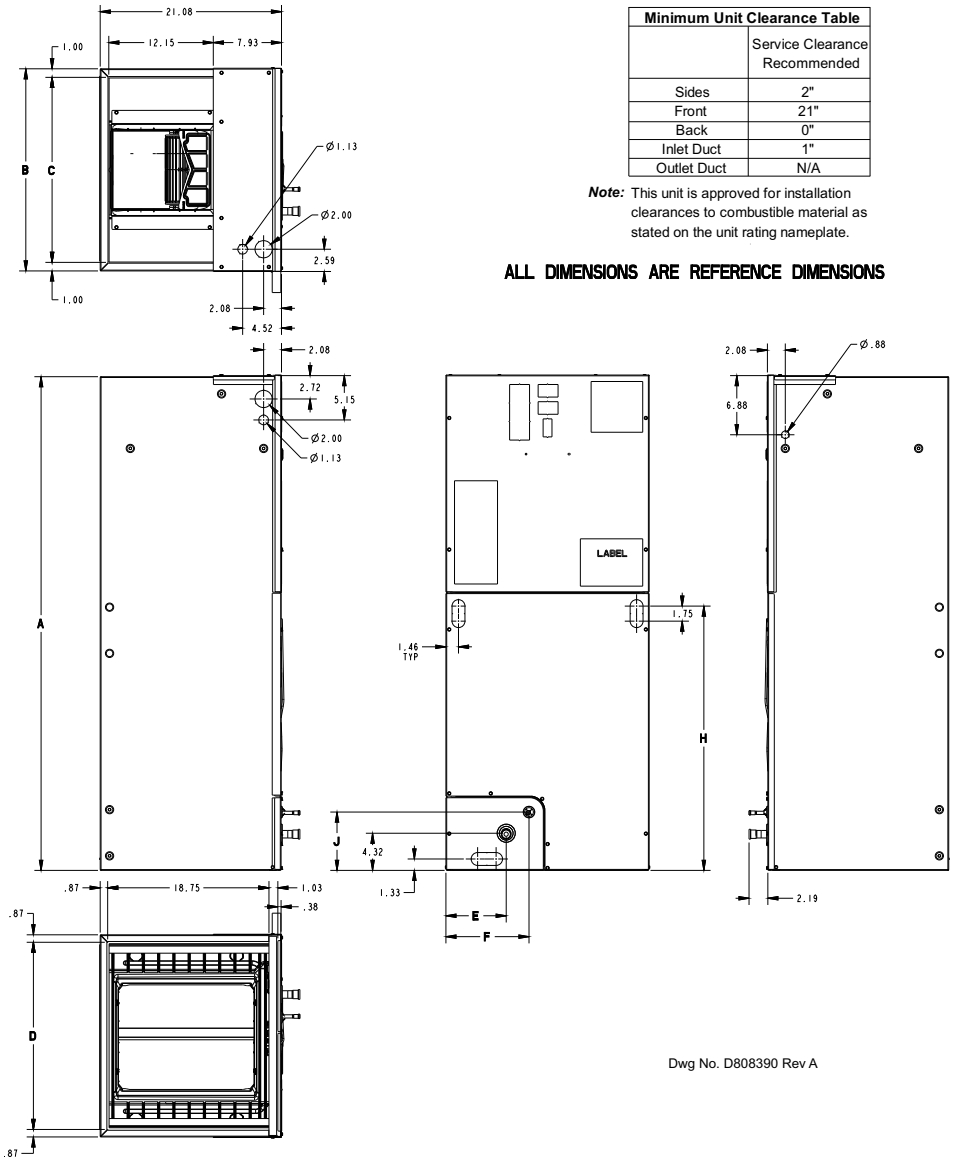

Minimum Unit Clearance Table	
	Service Clearance Recommended
Sides	2"
Front	21"
Back	0"
Inlet Duct	1"
Outlet Duct	N/A

Note: This unit is approved for installation clearances to combustible material as stated on the unit rating nameplate.

Table 21. Dimensions (inches)

Air Handler Model	A	B	C	D	E	F	H	J	Flow Control	Gas Line Braze
5TEM6B02, 03	46.77	18.50	16.50	16.75	5.43	7.08	20.07	5.76	TXV	3/4
5TEM6D04, D05	51.27	23.50	21.50	21.75	7.01	9.66	24.58	6.76	TXV	7/8
5TEM6D06, D07	57.40	23.50	21.50	21.75	7.01	9.66	30.71	6.76	TXV	7/8

Notes

Trane - by Trane Technologies (NYSE: TT), a global innovator - creates comfortable, energy efficient indoor environments for commercial and residential applications. For more information, please visit trane.com or tranetechnologies.com.

Trane has a policy of continuous data improvement and it reserves the right to change design and specifications without notice. We are committed to using environmentally conscious print practices.

AHR-PSD009B-EN 31 Oct 2025
Supersedes AHR-PSD009A-EN (June 2025)

©2025 Trane

Product and Submittal Data

Split System Heat Pump

5TWA4036A3000A
5TWA4042A3000A
5TWA4048A3000A
5TWA4060A3000A
5TWA4036A4000A
5TWA4042A4000A
5TWA4048A4000A
5TWA4060A4000A

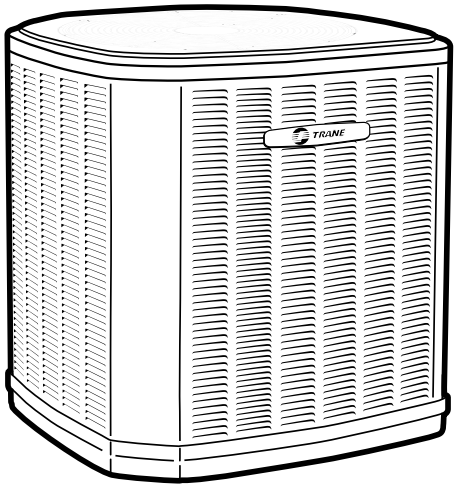

Note: *Graphics in this document are for representation only. Actual model may differ in appearance.*

June 2025

ODR-PSD006A-EN

Copyright

This document and the information in it are the property of Trane, and may not be used or reproduced in whole or in part without written permission. Trane reserves the right to revise this publication at any time, and to make changes to its content without obligation to notify any person of such revision or change.

Trademark

All trademarks referenced in this document are the trademarks of their respective owners.

Data Notes

This document supersedes and includes data from the documents listed below.

Table 1. Data notes

Literature Number	Title
22-2003-1*-EN	Split System Heat Pump Product Data
5TWA4036A-SUB-3*-EN	Split System Heat Pump 208-230V Model 5TWA4036A3000A Submittal
5TWA4036A-SUB-4*-EN	Split System Heat Pump 460V Model 5TWA4036A4000A Submittal
5TWA4042A-SUB-3*-EN	Split System Heat Pump 208-230V Model 5TWA4042A3000A Submittal
5TWA4042A-SUB-4*-EN	Split System Heat Pump 460V Model 5TWA4042A4000A Submittal
5TWA4048A-SUB-3*-EN	Split System Heat Pump 208-230V Model 5TWA4048A3000A Submittal
5TWA4048A-SUB-4*-EN	Split System Heat Pump 460V Model 5TWA4048A4000A Submittal
5TWA4060A-SUB-3*-EN	Split System Heat Pump 208-230V Model 5TWA4060A3000A Submittal
5TWA4060A-SUB-4*-EN	Split System Heat Pump 460V Model 5TWA4060A4000A Submittal

Table of Contents

Product Specifications 4
Sound Power Level 7
Accessory Description and Usage 8
Model Nomenclature. 8
Wiring Diagram. 9
Dimensional Data. 14
Mechanical Specification Options 15

Product Specifications

Table 2. 3-Phase, 208/230V

OUTDOOR UNIT [a] [b]	5TWA4036A3000A	5TWA4042A3000A	5TWA4048A3000A	5TWA4060A3000A
POWER CONNS. - V/PH/HZ [c]	208/230/3/60	208/230/3/60	208/230/3/60	208/230/3/60
MIN. BRCH. CIR. AMPACITY	16.6	18.1	18.1	22.8
BR. CIR. PROT. RTG. - MAX. (AMPS)	25	30	30	35
COMPRESSOR	CLIMATUFF®- SCROLL	CLIMATUFF®- SCROLL	CLIMATUFF®- SCROLL	CLIMATUFF®- SCROLL
NO. USED - NO. STAGES	1 - 1	1 - 1	1 - 1	1 - 1
VOLTS/PH/HZ	200/230/3/60	200/230/3/60	200/230/3/60	200/230/3/60
R.L. AMPS [d] - L.R. AMPS	12.8 - 97.5	12.2 - 102.8	12.2 - 120.4	16.0 - 156.4
FACTORY INSTALLED				
START COMPONENTS [e]	NO	NO	NO	NO
INSULATION/SOUND BLANKET	NO	NO	NO	NO
COMPRESSOR HEAT	YES	YES	YES	YES
OUTDOOR FAN	PROPELLER	PROPELLER	PROPELLER	PROPELLER
DIA. (IN.) - NO. USED	27.5 - 1	27.5 - 1	27.5 - 1	27.5 - 1
TYPE DRIVE - NO. SPEEDS	DIRECT - 1	DIRECT - 1	DIRECT - 1	DIRECT - 1
CFM @ 0.0 IN. W.G. [f]	4230	4992	4992	4992
NO. MOTORS - HP	1 - 1/8	1 - 1/3	1 - 1/3	1 - 1/3
MOTOR SPEED R.P.M.	850	850	850	850
VOLTS/PH/HZ	200/230/1/60	208/230/1/60	208/230/1/60	208/230/1/60
F.L. AMPS	0.64	2.80	2.80	2.80
OUTDOOR COIL - TYPE	SPINE FIN™	SPINE FIN™	SPINE FIN™	SPINE FIN™
ROWS - F.P.I.	1 - 24	2 - 24	2 - 24	2 - 24
FACE AREA (SQ. FT.)	24	30.8	30.8	30.8
TUBE SIZE (IN.)	3/8	3/8	3/8	3/8
REFRIGERANT CONTROL	EXPANSION VALVE	EXPANSION VALVE	EXPANSION VALVE	EXPANSION VALVE
REFRIGERANT				
LBS. - R-454B (O.D. UNIT) [g]	5 LBS., 10 OZ	7 LBS., 14 OZ	8 LBS., 9 OZ	8 LBS., 6 OZ
FACTORY SUPPLIED	YES	YES	YES	YES
LINE SIZE - IN. O.D. GAS [h] [i]	3/4	7/8	7/8	7/8
LINE SIZE - IN. O.D. LIQ.	5/16	5/16	5/16	5/16
CHARGING SPECIFICATIONS				
SUBCOOLING	10°F	10°F	10°F	10°F
DIMENSIONS	H x W x D	H x W x D	H x W x D	H x W x D
CRATED (IN.)	38.5 x 35 x 37.9	50.5 x 35 x 37.9	50.5 x 35 x 37.9	50.5 x 35 x 37.9
WEIGHT				
SHIPPING (LBS.)	256	301	301	301
NET (LBS.)	222	251	251	251
OPTIONAL ACCESSORIES:				
ANTI-SHORT CYCLE TIMER	TAYASCT501A	TAYASCT501A	TAYASCT501A	TAYASCT501A
EVAPORATOR DEFROST CONTROL	NA	NA	NA	NA
RUBBER ISOLATOR KIT	BAYISLT101	BAYISLT101	BAYISLT101	BAYISLT101
EXTREME CONDITION MOUNT KIT	BAYECMT004	BAYECMT004	BAYECMT004	BAYECMT004
SOUND ENCLOSURE	BAYSDEN003	BAYSDEN004	BAYSDEN004	BAYSDEN004
SEACOAST KIT	BAYSEAC001	BAYSEAC001	BAYSEAC001	BAYSEAC001
LOW AMBIENT KIT	BAYLOAM107	BAYLOAM103	BAYLOAM103	BAYLOAM103
SERVICE VALVE PANEL COVER	TAYSVPANL0044AA	TAYSVPANL0046AA	TAYSVPANL0046AA	TAYSVPANL0046AA
REFRIGERANT LINESET[j]				

[a] Certified in accordance with the Air-Source Unitary Air-conditioner Equipment certification program, which is based on AHRI standard 210/240.
[b] Rated in accordance with AHRI standard 270.
[c] Calculated in accordance with Natl. Elec. Codes. Use only HACR circuit breakers or fuses.
[d] This value shown for compressor RLA on the unit nameplate and on this specification sheet is used to compute minimum branch circuit ampacity and max. fuse size. The value shown is the branch circuit selection current.

Table 2. 3-Phase, 208/230V (continued)

(e) No means no start components. Yes means quick start kit components. PTC means positive temperature coefficient starter. Optional kit shown.
(f) Standard Air - Dry Coil - Outdoor
(g) This value approximate. For more precise value see unit nameplate.
(h) Reference the outdoor unit ship-with literature for refrigerant piping length and lift guidelines. Reference the *refrigerant piping software pub # 32-3312-xx or refrigerant piping application guide* (SS-APG006-xx) for long line sets or specialty applications (xx denotes latest revision).
(i) The outdoor condensing units are factory charged with the system charge required for the outdoor condensing unit, ten (10) feet of tested connecting line, and the smallest rated indoor evaporative coil match. Always verify proper system charge via subcooling (TXV/EEV) or superheat (fixed orifice) per the unit nameplate.
(j) 25, 30, 35 and 50 foot linesets available. For a complete listing of lineset options available from equipment or supply stores, refer to the Trane Residential and Light Commercial Product Handbook.

Table 3. 4-Phase, 460V

OUTDOOR UNIT (a) (b)	5TWA4036A4000A	5TWA4042A4000A	5TWA4048A4000A	5TWA4060A4000A
POWER CONNS. - V/PH/HZ (c)	460/3/60	460/3/60	460/3/60	460/3/60
MIN. BRCH. CIR. AMPACITY	6.8	8.6	9.4	11
BR. CIR. PROT. RTG. - MAX. (AMPS)	15	15	15	15
COMPRESSOR	CLIMATUFF®- SCROLL	CLIMATUFF®- SCROLL	CLIMATUFF®- SCROLL	CLIMATUFF®- SCROLL
NO. USED - NO. STAGES	1 - 1	1 - 1	1 - 1	1 - 1
VOLTS/PH/HZ	460/3/60	460/3/60	460/3/60	460/3/60
R.L. AMPS (d) - L.R. AMPS	5.1 - 44.3	5.8 - 50.0	6.4 - 50.0	7.7 - 69.0
FACTORY INSTALLED				
START COMPONENTS (e)	NO	NO	NO	NO
INSULATION/SOUND BLANKET	NO	NO	NO	NO
COMPRESSOR HEAT	YES	YES	YES	YES
OUTDOOR FAN	PROPELLER	PROPELLER	PROPELLER	PROPELLER
DIA. (IN.) - NO. USED	27.5 - 1	27.5 - 1	27.5 - 1	27.5 - 1
TYPE DRIVE - NO. SPEEDS	DIRECT - 1	DIRECT - 1	DIRECT - 1	DIRECT - 1
CFM @ 0.0 IN. W.G. (f)	4230	4992	4992	4992
NO. MOTORS - HP	1 - 1/8	1 - 1/3	1 - 1/3	1 - 1/3
MOTOR SPEED R.P.M.	825	850	850	850
VOLTS/PH/HZ	460/1/60	460/1/60	460/1/60	460/1/60
F.L. AMPS	0.38	1.4	1.4	1.4
OUTDOOR COIL - TYPE	SPINE FIN™	SPINE FIN™	SPINE FIN™	SPINE FIN™
ROWS - F.P.I.	1 - 24	2 - 24	2 - 24	2 - 24
FACE AREA (SQ. FT.)	24	30.8	30.8	30.8
TUBE SIZE (IN.)	3/8	3/8	3/8	3/8
REFRIGERANT CONTROL	EXPANSION VALVE	EXPANSION VALVE	EXPANSION VALVE	EXPANSION VALVE
REFRIGERANT				
LBS. - R-454B (O.D. UNIT) (g)	5 LBS., 10 OZ	7 LBS., 14 OZ	8 LBS., 9 OZ	8 LBS., 6 OZ
FACTORY SUPPLIED	YES	YES	YES	YES
LINE SIZE - IN. O.D. GAS (h) (i)	3/4	7/8	7/8	7/8
LINE SIZE - IN. O.D. LIQ.	5/16	5/16	5/16	5/16
CHARGING SPECIFICATIONS				
SUBCOOLING	10°F	10°F	10°F	10°F
DIMENSIONS	H x W x D	H x W x D	H x W x D	H x W x D
CRATED (IN.)	38.5 x 35 x 37.9	50.5 x 35 x 37.9	50.5 x 35 x 37.9	50.5 x 35 x 37.9
WEIGHT				
SHIPPING (LBS.)	256	301	301	301
NET (LBS.)	222	251	251	251
OPTIONAL ACCESSORIES:				
ANTI-SHORT CYCLE TIMER	TAYASCT501A	TAYASCT501A	TAYASCT501A	TAYASCT501A
EVAPORATOR DEFROST CONTROL	NA	NA	NA	NA
RUBBER ISOLATOR KIT	BAYISLT101	BAYISLT101	BAYISLT101	BAYISLT101
EXTREME CONDITION MOUNT KIT	BAYECMT004	BAYECMT004	BAYECMT004	BAYECMT004
SOUND ENCLOSURE	BAYSDEN003	BAYSDEN004	BAYSDEN004	BAYSDEN004

Table 3. 4-Phase, 460V (continued)

CRANKCASE KIT	BAYCCHT302	BAYCCHT301	BAYCCHT301	BAYCCHT301
START KIT	BAYKSKT263	BAYKSKT263	BAYKSKT263	BAYKSKT263
SEACOAST KIT	BAYSEAC001	BAYSEAC001	BAYSEAC001	BAYSEAC001
LOW AMBIENT KIT	BAYLOAM107	BAYLOAM103	BAYLOAM103	BAYLOAM103
SERVICE VALVE PANEL COVER	TAYSVPANL3343AA	TAYSVPANL0046AA	TAYSVPANL0046AA	TAYSVPANL0046AA
REFRIGERANT LINESET (j)				

(a) Certified in accordance with the Air-Source Unitary Air-conditioner Equipment certification program, which is based on AHRI standard 210/240.
(b) Rated in accordance with AHRI standard 270.
(c) Calculated in accordance with Natl. Elec. Codes. Use only HACR circuit breakers or fuses.
(d) This value shown for compressor RLA on the unit nameplate and on this specification sheet is used to compute minimum branch circuit ampacity and max. fuse size. The value shown is the branch circuit selection current.
(e) No means no start components. Yes means quick start kit components. PTC means positive temperature coefficient starter. Optional kit shown.
(f) Standard Air - Dry Coil - Outdoor
(g) This value approximate. For more precise value see unit nameplate.
(h) Reference the outdoor unit ship-with literature for refrigerant piping length and lift guidelines. Reference the *refrigerant piping software pub # 32-3312-xx or refrigerant piping application guide* (SS-APG006-xx) for long line sets or specialty applications (xx denotes latest revision).
(i) The outdoor condensing units are factory charged with the system charge required for the outdoor condensing unit, ten (10) feet of tested connecting line, and the smallest rated indoor evaporative coil match. Always verify proper system charge via subcooling (TXV/EEV) or superheat (fixed orifice) per the unit nameplate.
(j) 25, 30, 35 and 50 foot linesets available. For a complete listing of lineset options available from equipment or supply stores, refer to the Trane Residential and Light Commercial Product Handbook.

Sound Power Level

Table 4. Sound power level

Sound Power Level									
MODEL	**A-Weighted Sound Power Level [dB(A)]**	**Full Octave Sound Power(dB)**							
		63 Hz*	125 Hz	250 Hz	500 Hz	1000 Hz	2000 Hz	4000 Hz	8000 Hz
5TWA4036A3	76	78	75	77	75	70	64	61	56
5TWA4042A3	74	72	72	71	69	70	62	57	52
5TWA4048A3	74	72	72	71	69	70	62	57	52
5TWA4060A3	76	78	75	77	75	70	64	61	56
5TWA4036A4	76	78	75	77	75	70	64	61	56
5TWA4042A4	74	72	72	71	69	70	62	57	52
5TWA4048A4	74	72	72	71	69	70	62	57	52
5TWA4060A4	76	78	75	77	75	70	64	61	56

Note: *Rated in accordance with AHRI Standard 270–2008 *For reference only.*

Accessory Description and Usage

Anti-Short Cycle Timer — Solid state timing device that prevents compressor recycling until five (5) minutes have elapsed after satisfying call or power interruptions. Use in area with questionable power delivery, commercial applications, long lineset, etc.

Evaporation Defrost Control — SPST Temperature actuated switch that cycles the condenser off as indoor coil reaches freeze-up conditions. Used for low ambient cooling to 30°F with TXV.

Rubber Isolators — Five (5) large rubber donuts to isolate condensing unit from transmitting energy into mounting frame or pad. Use on any application where sound transmission needs to be minimized.

Extreme Condition Mount Kit — Bracket kits to securely mount condensing unit to a frame or pad without removing any panels. Use in areas with high winds, or on commercial roof tops, etc.

AHRI Standard Capacity Rating Conditions

AHRI Standard 210/240 Rating Conditions

1. Cooling 80°F DB, 67°F WB air entering indoor coil, 95°F DB air entering outdoor coil.
2. High Temperature Heating 47°F DB, 43°F WB air entering outdoor coil, 70°F DB air entering indoor coil.
3. Low Temperature Heating 17°F DB air entering outdoor coil.
4. Rated indoor airflow for heating is the same as for cooling.

AHRI Standard 270 Rating Conditions — (Noise rating numbers are determined with the unit in cooling operations.) Standard Noise Rating number is at 95°F outdoor air.

Model Nomenclature

Outdoor Units

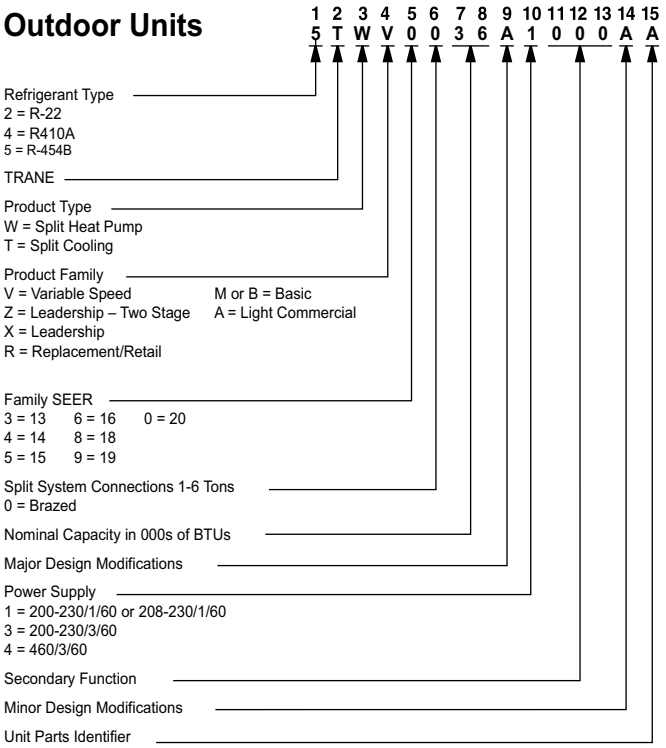

Wiring Diagram

Figure 1. 036A3 models

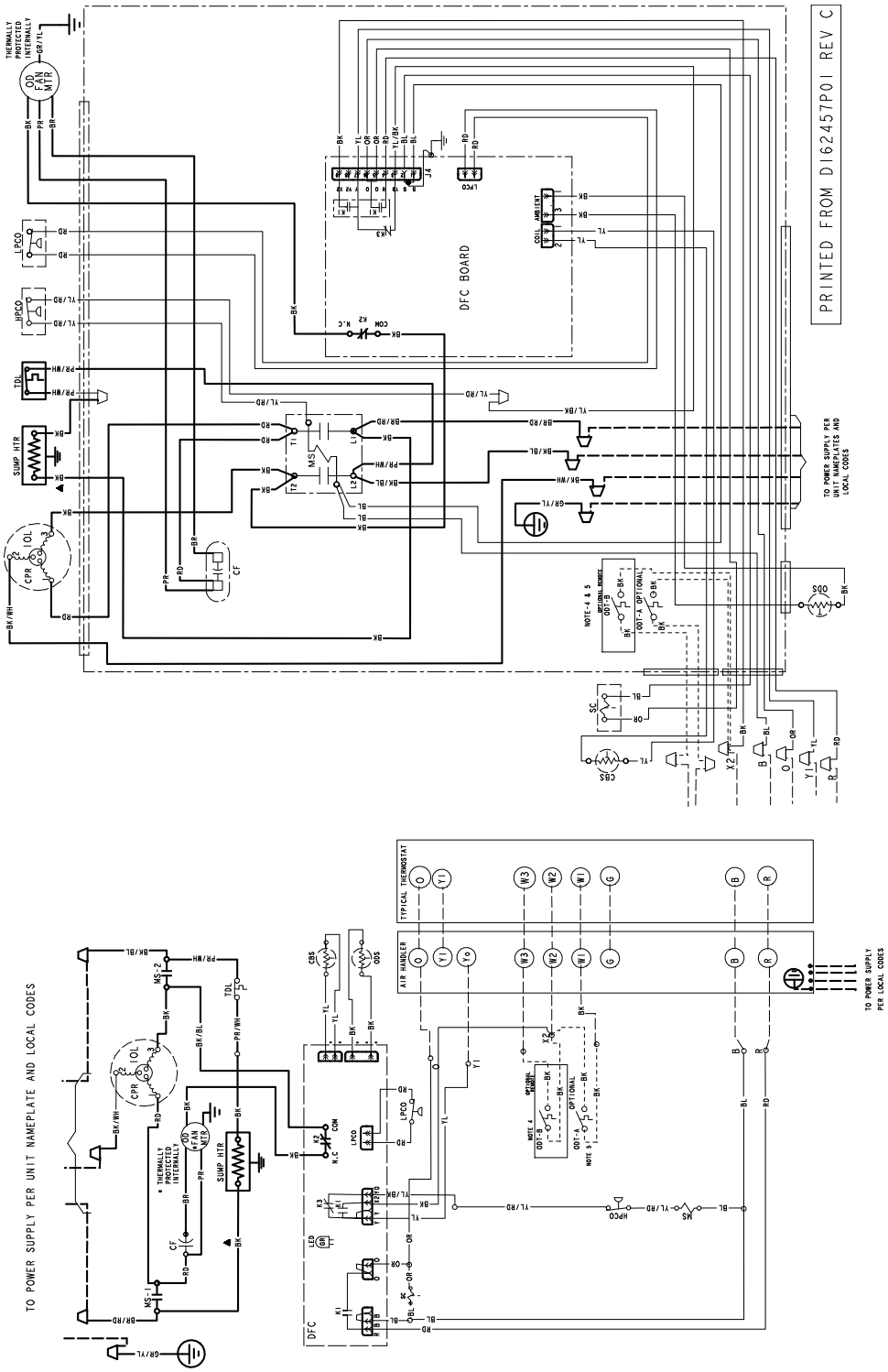

Figure 2. 042A3, 048A3, and 060A3 models

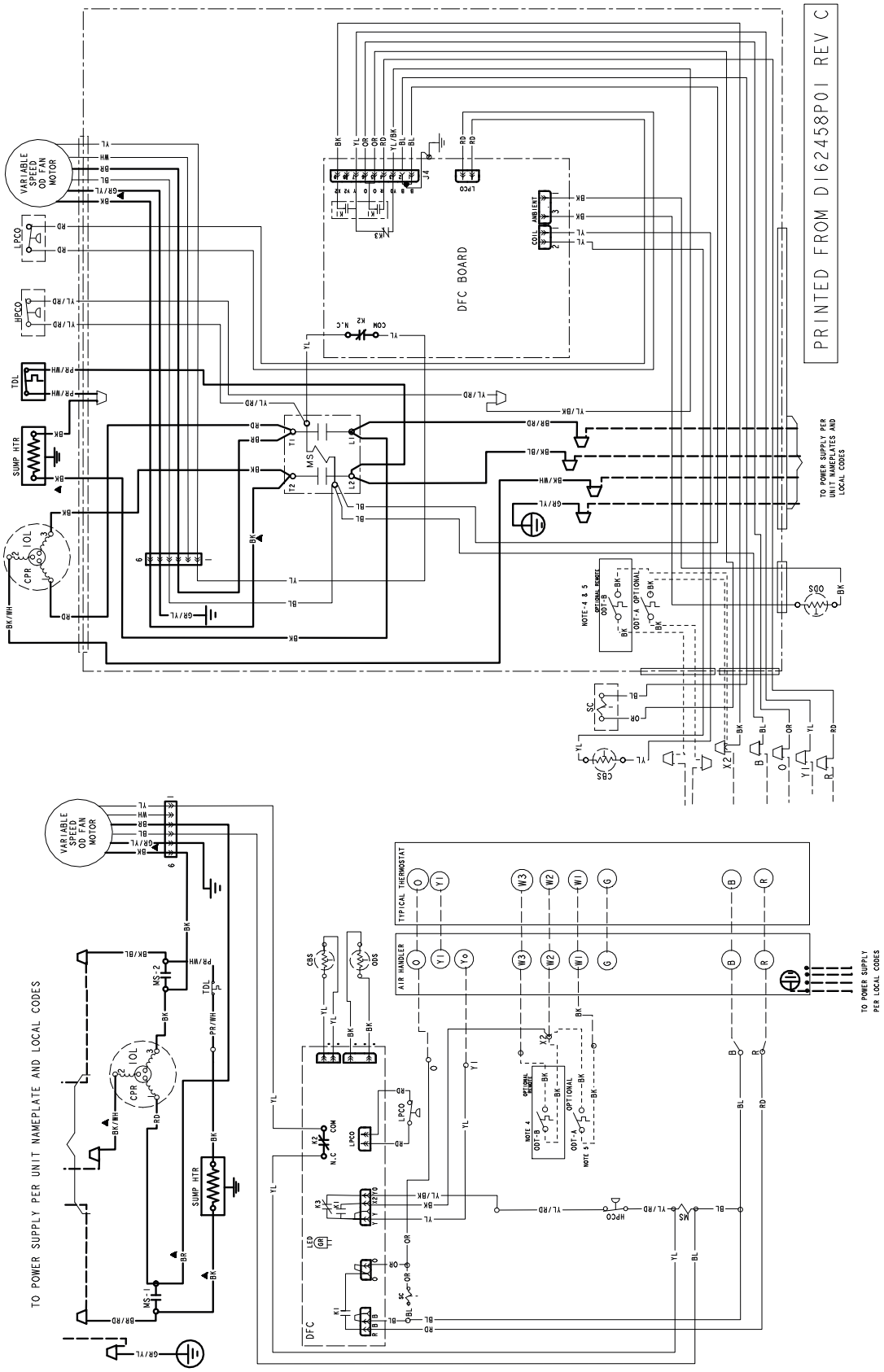

Figure 3. 036A4 models

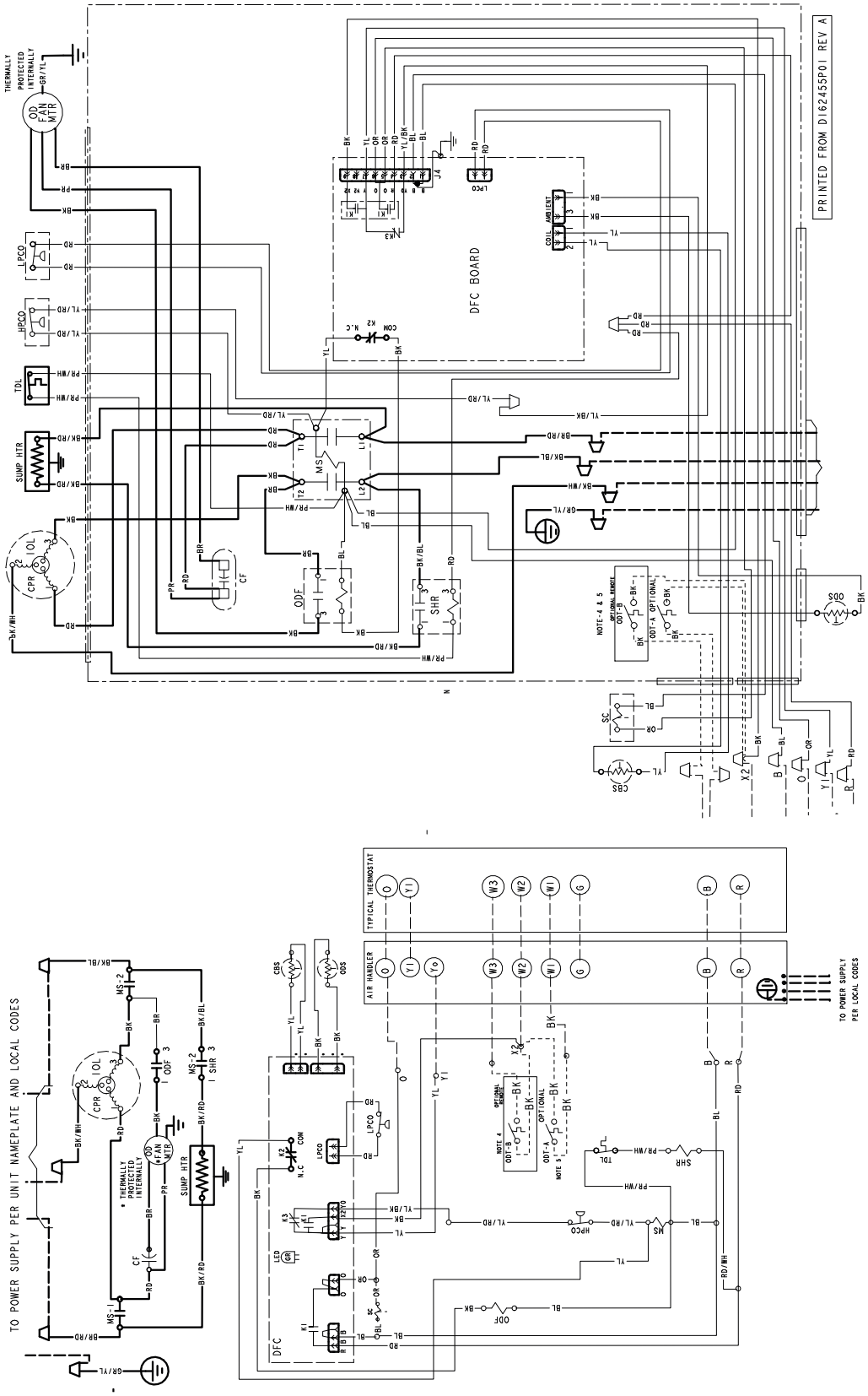

Figure 4. 042A4, 048A4, and 060A4 models

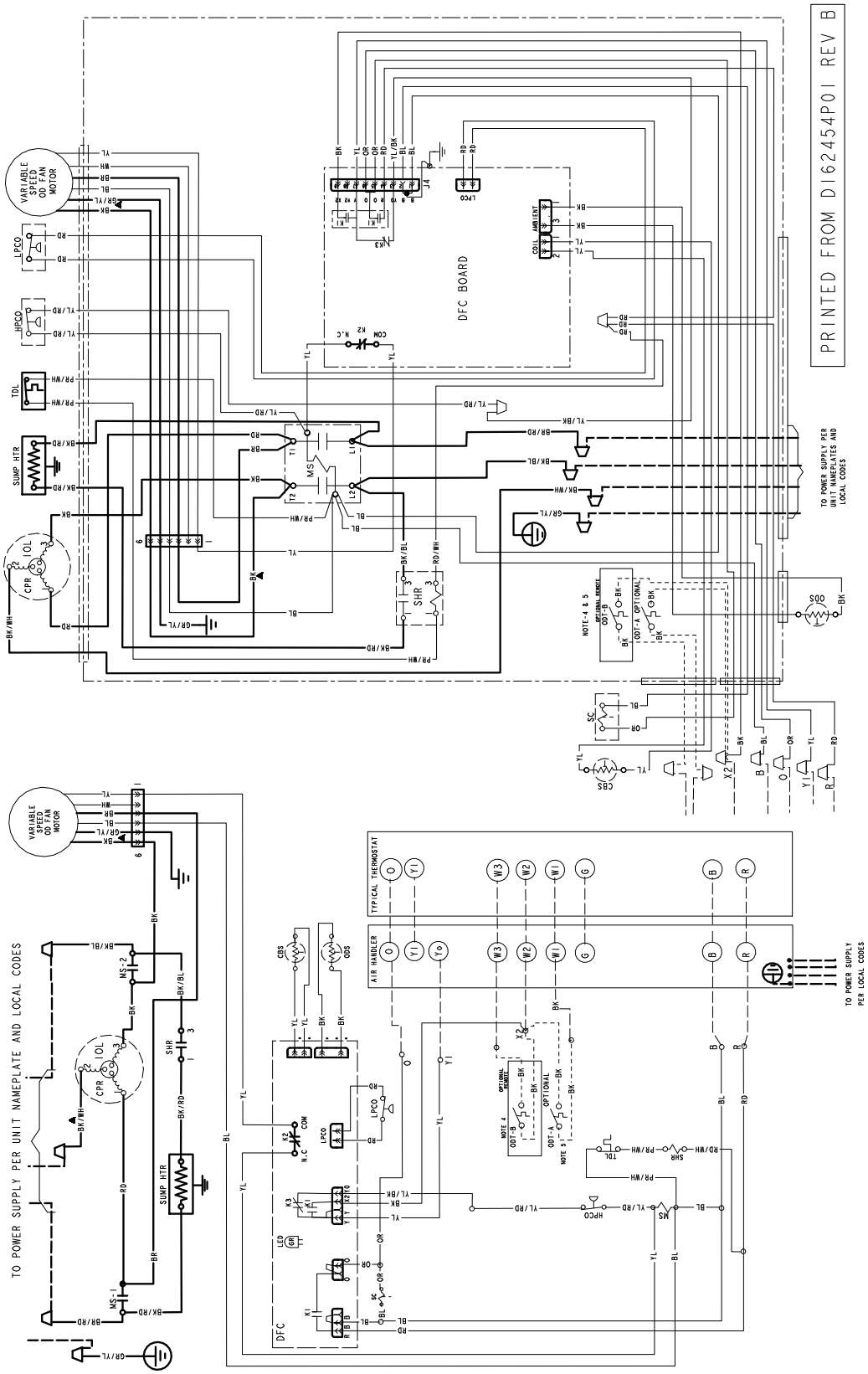

Figure 5. Legend and warnings

NOTES:

1. BE SURE POWER SUPPLY AGREES WITH EQUIPMENT NAMEPLATE.
2. POWER WIRING AND GROUNDING OF EQUIPMENT MUST COMPLY WITH LOCAL CODES.
3. LOW VOLTAGE WIRING TO BE NO. 18 AWG MINIMUM CONDUCTOR.
4. ODT-B MUST BE SET LOWER THAN ODT-A, IF ODT-B IS NOT USED, ADD JUMPER BETWEEN W2 AND W3 AT AIR HANDLER, IF USED, ODT-B MUST BE MOUNTED REMOTE OF CONTROL BOX IN AN APPROVED WEATHERPROOF ENCLOSURE
5. IF ODT-A IS NOT USED, ADD JUMPER BETWEEN W1 AND W2 AT AIR HANDLER

LEGEND

24 V / LINE V — FACTORY WIRING

24 V / LINE V — FIELD WIRING

FIELD INSTALLED FACTORY WIRING

TERMINAL BLOCK/BOA

RELAY CONTACT (N.C

RELAY CONTACT (N.C

THERMISTOR

MOTOR WINDING

MAGNETIC COIL

GROUND

JUNCTION

CAPACITOR

WIRE NUT OR

TERMINAL

FUSE

COLOR OF WIRE

BK/BL

COLOR OF MARKER

BK	BLACK	RD	RED	OR	ORANGE
BL	BLUE	WH	WHITE	GR	GREEN
BR	BROWN	YL	YELLOW	PR	PURPLE
PK	PINK				

TRANSFORMER

INTERNAL OVERLOAD PROTECTION

PRESSURE ACTUATED SWITCH

RESISTER OR HEATING ELEMENT

POL.PLUG FEMALE HOUSING (MALE TERMINALS)

POL. PLUG MALE HOUSING (FEMALE TERMINALS)

SINGLE INLINE CONNECTOR

HPCO	HIGH PRESSURE CUTOUT SWITCH
IOL	INTERNAL OVERLOAD PROTECTOR
LPCO	LOW PRESSURE CUTOUT SWITCH
MS	COMPRESSOR MOTOR CONTACTOR
ODA	OUTDOOR ANTICIPATOR

ACR	A/C RECTIFIER
CBS	COIL BOTTOM SENSOR
CF	FAN CAPACITOR
CN	WIRE CONNECTOR
CPR	COMPRESSOR
CR	RUN CAPACITOR
CS	STARTING CAPACITOR
CSR	CAPACITOR SWITCHING RELAY
DFC	DEFROST CONTROL
EEV	ELECTRONIC EXP VALVE
EEVC	ELECTRONIC EXP VALVE CONTROL
F	INDOOR FAN RELAY
OFT	OUTDOOR FAN THERMOSTAT
ODS	OUTDOOR TEMPERATURE SENSOR
ODT	OUTDOOR THERMOSTAT
P-TRD	PRESSURE TRANSDUCER
SC	SWITCH OVER VALVE SOLENOID
SHR	SUMP HEATER RELAY
SM	SYSTEM ON-OFF SWITCH
TDL	DISCHARGE LINE THERMOSTAT
TNS	TRANSFORMER
TEMP	SENSOR, TEMPERATURE
Y2C	HIGH CAPACITY CONTROL RELAY

R-454B REFRIGERANT CHARGING CHART							
LIQUID TEMP (°F)	DESIGN SUBCOOLING (°F)						
	8	9	10	11	12	13	14
	LIQUID GAGE PRESSURE (PSI)						
55	170	172	175	178	181	184	187
60	184	187	190	194	197	200	203
65	200	203	206	210	213	217	220
70	217	220	223	227	230	234	238
75	234	238	241	245	249	252	256
80	252	256	260	264	268	272	276
85	272	276	280	284	288	292	297
90	292	297	301	305	309	314	318
95	314	318	323	327	332	336	341
100	336	341	346	351	355	360	365
105	360	365	370	375	380	385	390
110	385	390	396	401	406	412	417
115	412	417	422	428	433	439	445
120	439	445	450	456	462	468	474
125	468	474	480	486	492	498	504

⚠WARNING

HAZARDOUS VOLTAGE!

DISCONNECT ALL ELECTRICAL POWER INCLUDING REMOTE DISCONNECTS BEFORE SERVICING.

Failure to disconnect power before servicing can cause severe personal injury or death.

⚠CAUTION

USE COPPER CONDUCTORS ONLY!

UNIT TERMINALS ARE NOT DESIGNED TO ACCEPT OTHER TYPES OF CONDUCTORS.

Failure to do so may cause damage to the equipment.

▲NOTE:

MATERIAL: WHITE POLYPROPYLENE SUITABLE FOR USE IN OUTDOOR ENVIRONMENT.

ADHESIVE: PRESSURE SENSTIVE ADHESIVE WITH RELEASE PAPER SUITABLE FOR OUTDOOR APPLICATION ON PAINTED OR GALVANIZED SHEET METAL SURFACES

SIZE: 6 1/2" X 11"

Dimensional Data

Figure 6. Dimensional data

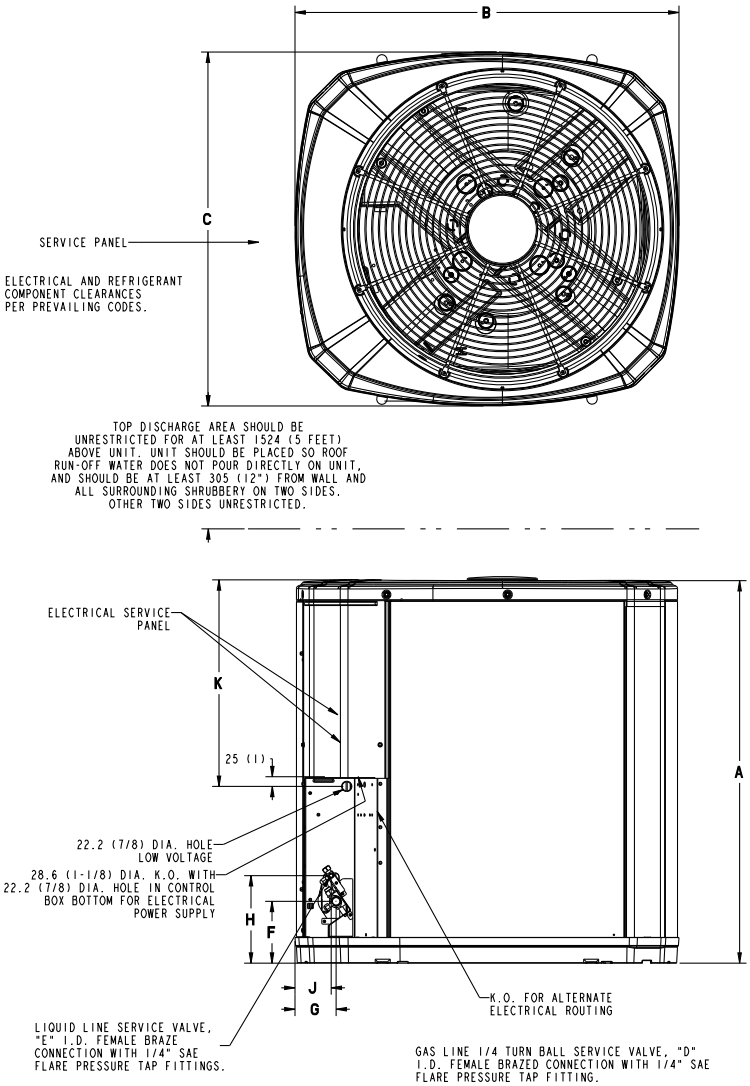

Table 5. Unit dimensions

Model	Base	A	B	C	D	E	F	G	H	J	K
5TWA4036-A3000A	4	841 (33-1/8)	946 (37–1/4)	870 (34–1/4)	3/4	5/16	143 (5–5/8)	98 (3–7/8)	219 (8–5/8)	86 (3–3/8)	508 (20)
5TWA4042-A3000A	4	1147 (45–1/8)	946 (37–1/4)	870 (34–1/4)	7/8	5/16	152 (6)	98 (3–7/8)	219 (8–5/8)	86 (3–3/8)	813 (32)
5TWA4048-A3000A	4	1147 (45–1/8)	946 (37–1/4)	870 (34–1/4)	7/8	5/16	152 (6)	98 (3–7/8)	219 (8–5/8)	86 (3–3/8)	813 (32)
5TWA4060-A3000A	4	1147 (45–1/8)	946 (37–1/4)	870 (34–1/4)	7/8	5/16	152 (6)	98 (3–7/8)	219 (8–5/8)	86 (3–3/8)	813 (32)
5TWA4036-A4000A	4	841 (33-1/8)	946 (37–1/4)	870 (34–1/4)	3/4	5/16	143 (5–5/8)	98 (3–7/8)	219 (8–5/8)	86 (3–3/8)	508 (20)
5TWA4042-A4000A	4	1147 (45–1/8)	946 (37–1/4)	870 (34–1/4)	7/8	5/16	152 (6)	98 (3–7/8)	219 (8–5/8)	86 (3–3/8)	813 (32)
5TWA4048-A4000A	4	1147 (45–1/8)	946 (37–1/4)	870 (34–1/4)	7/8	5/16	152 (6)	98 (3–7/8)	219 (8–5/8)	86 (3–3/8)	813 (32)
5TWA4060-A4000A	4	1147 (45–1/8)	946 (37–1/4)	870 (34–1/4)	7/8	5/16	152 (6)	98 (3–7/8)	219 (8–5/8)	86 (3–3/8)	813 (32)

Mechanical Specification Options

General

The outdoor condensing units are factory charged with the system charge required for the outdoor condensing unit, ten (10) feet of tested connecting line, and the smallest rated indoor evaporative coil match. This unit is designed to operate at outdoor ambient temperatures as high as 115°F. Cooling capacities are matched with a wide selection of air handlers and furnace coils that are AHRI certified. The unit is certified to UL 60335-2-40. Exterior is designed for outdoor application.

Casing

Unit casing is constructed of heavy gauge, galvanized steel and painted with a weather-resistant powder paint finish. The corner panels are prepainted. All panels are subjected to our 1,000 hour salt spray test.

Refrigerant Controls

Refrigeration system controls include condenser fan, compressor contactor and low and high pressure switches. A factory supplied, field installed liquid line drier is standard.

Compressor

The compressor features internal over temperature and pressure protection. Other features include: Centrifugal oil pump and low vibration and noise.

Condenser Coil

The outdoor coil provides low airflow resistance and efficient heat transfer. The coil is protected on all four sides by louvered panels.

Low Ambient Cooling

As manufactured, this system has a cooling capacity to 55°F. The addition of an evaporator defrost control permits operation to 40°F. The addition of an evaporator defrost control with TXV permits low ambient cooling to 30°F.

The addition of the BAYLOAM107A low ambient kit permits ambient cooling to 20°F.

The addition of the BAYLOAM108 low ambient kit permits ambient cooling to 20°F.

Thermostats – Cooling only and heat/cooling (manual and automatic change over). Sub-base to match thermostat and locking thermostat cover.

Trane - by Trane Technologies (NYSE: TT), a global innovator - creates comfortable, energy efficient indoor environments for commercial and residential applications. For more information, please visit trane. com or tranetechnologies.com.

The AHRI Certified mark indicates Trane U.S. Inc. participation in the AHRI Certification program. For verification of individual certified products, go to ahridirectory.org.

Trane has a policy of continuous data improvement and it reserves the right to change design and specifications without notice. We are committed to using environmentally conscious print practices.

ODR-PSD006A-EN 10 Jun 2025
Supersedes (New)

©2025 Trane